www.ferrariventilatori.com

FERRARI™
INDUSTRIAL FAN TECHNOLOGY

F.A.R. CATALOGUE

CENTRIFUGAL FAN

amca CERTIFIED RATINGS
SOUND AND AIR PERFORMANCE
AIR MOVEMENT AND CONTROL ASSOCIATION INTERNATIONAL, INC.®

F. LLI Ferrari Ventilatori Industriali S.p.A. certifies that the models shown herein are licensed to bear the AMCA Seal. The ratings shown are based on tests and procedures performed in accordance with AMCA Publication 211 and AMCA Publication 311 and comply with the requirements of the AMCA Certified Ratings Program.

GENERAL INDEX

CENTRIFUGAL FANS

ABOUT FANS

ABOUT FANS

General concepts

Fans are machines that create continuous air movement by means of a rotating impeller. The main physical qualities that characterize a fan are: capacity, pressure efficiency, and number of revolutions.

CAPACITY

Is represented by the volume of air which is generated by the fan in a unit of time, and is expressed in m³/s or m³/h. If the capacity is given in Nm³/h the following formula is used to transform it into m³/s:

$$V = \frac{Q \cdot (273 + t) \cdot 760}{3600 \cdot 273 \cdot Pb} = m^3/h$$

PRESSURE

The total pressure is represented by the algebraic sum of the dynamic and the static pressure. (Expressed Kgf/m²).
Static pressure is the pressure exerted on the walls of the air duct. Dynamic pressure is the pressure required to set air in motion and corresponds to kinetic energy. It can be expressed in the following formula:

$$Pd = \frac{\left(\frac{V}{A}\right)^2 \cdot \gamma}{2\,g} = Kgf/m^2$$

where:
Pb = barometric pressure in mm Hg
Q = capacity in Nm³/h
V = capacity in m³/s
A = outlet in m²
γ = air specific weight in Kgf/m³
g = acceleration due to gravity
Pd = dynamic pressure in Kgf/m²
t = temperature in centigrades

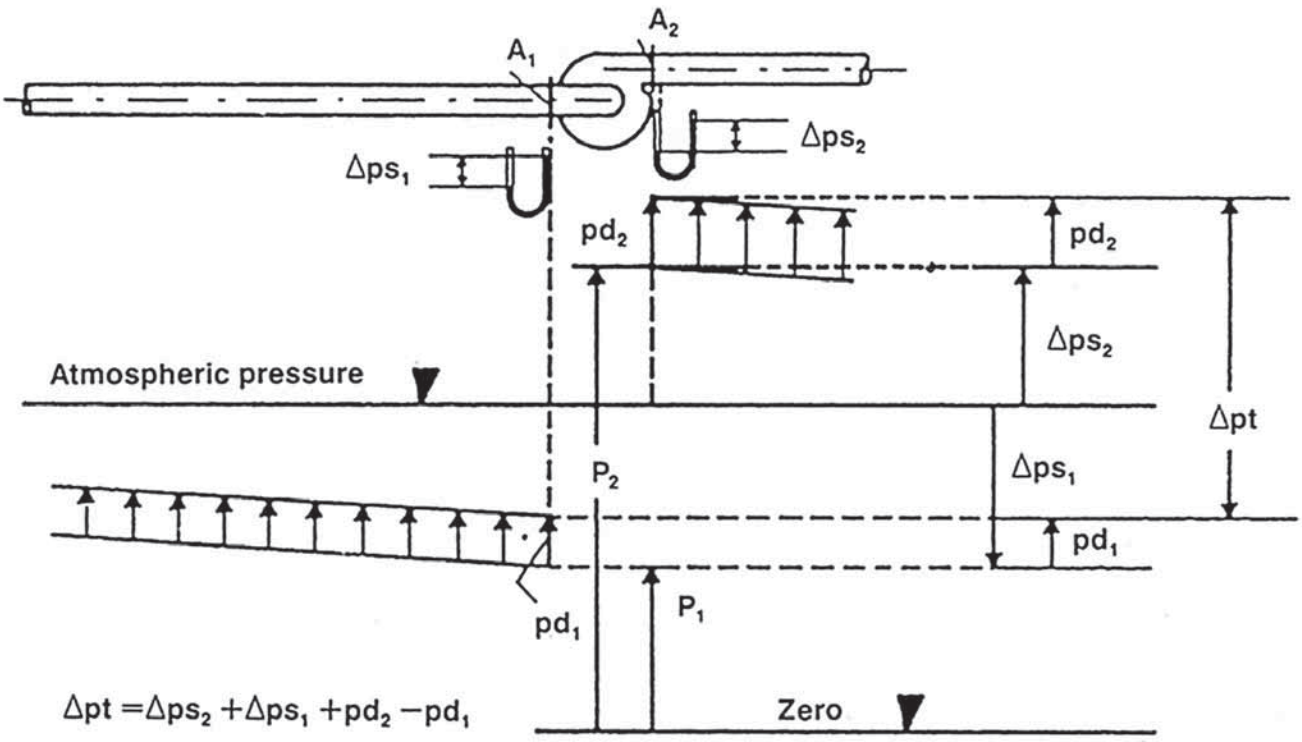

Air specific weight depending on temperature.

°C	-40	-30	-20	-10	0	+10	+15	+20	+30	+40	+50	+60	+70	+80	+90	+100	+120	+140	+160	+180	+200	+220	+240	+260	+280	+300
γ	1,515	1,452	1,396	1,342	1,293	1,248	1,226	1,205	1,165	1,128	1,093	1,060	1,029	1,000	0,973	0,947	0,90	0,85	0,82	0,78	0,75	0,72	0,69	0,66	0,64	0,62

EFFICIENCY

Is the proportion between the power absorbed by the fan and the power produced, expressed by the following formula:

$$\eta = \frac{V \cdot Pt}{102 \cdot PA}$$

where:
V = capacity in m^3/s
Ps = static pressure in Kgf/m^2
Pt = total pressure in Kgf/m^2
PA = power absorbed in KW
η = fan efficiency

SPEED OF ROTATION

Speed of rotation is the number of turns per minute of an impeller required to move a specific volume of air in a given amount of time.

There are some ratio laws that regulate the operating features of a fan depending on a change in the speed of rotation or of the air density.
When changing the speed of rotation (n) at stable air density:
1) Capacity (V) varies directly to the ratio of the number of turns.

$$V_1 = V \cdot \frac{n^1}{n}$$

2) Pressure (Pt) varies with the squared ratio of the number of turns.

$$Pt_1 = Pt \cdot \left(\frac{n^1}{n}\right)^2$$

3) Power (PA) varies with the cube of the number of turns.

$$PA_1 = PA \cdot \left(\frac{n^1}{n}\right)^3$$

When changing the air density at stable revolving speed:
1) Capacity (V) keeps stable.
2) Pressure (Pt) and Power (PA) vary with the ratio of air density.

$$Pt_1 = Pt \cdot \frac{\gamma^1}{\gamma} \qquad PA_1 = PA \cdot \frac{\gamma^1}{\gamma}$$

The air density depending on change of temperature and barometric pressure is given by the following formula:

$$\gamma = 1{,}293 \cdot \frac{273}{(273 + t)} \cdot \frac{Pb}{760} = Kgf/m^3$$

Atmospheric pressure depending on altitude above sea-level.

mt	0	500	1000	1500	2000	2500	3000	3500	4000	4500
Pb	760	720	680	640	600	560	530	500	470	440

CENTRIFUGAL FANS

CONSTRUCTION FEATURES

CONSTRUCTION FEATURES

Arrangement 4

For direct drive. Wheel keyed to motor shaft.
Motor is supported by the base.
Max. air temperature: 60° C

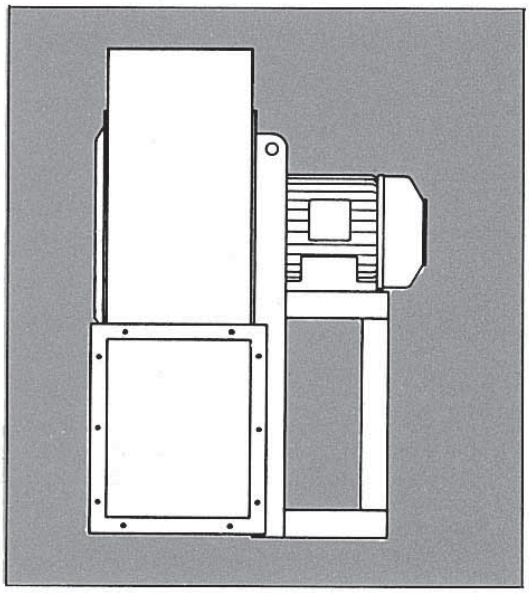

Outlet positions

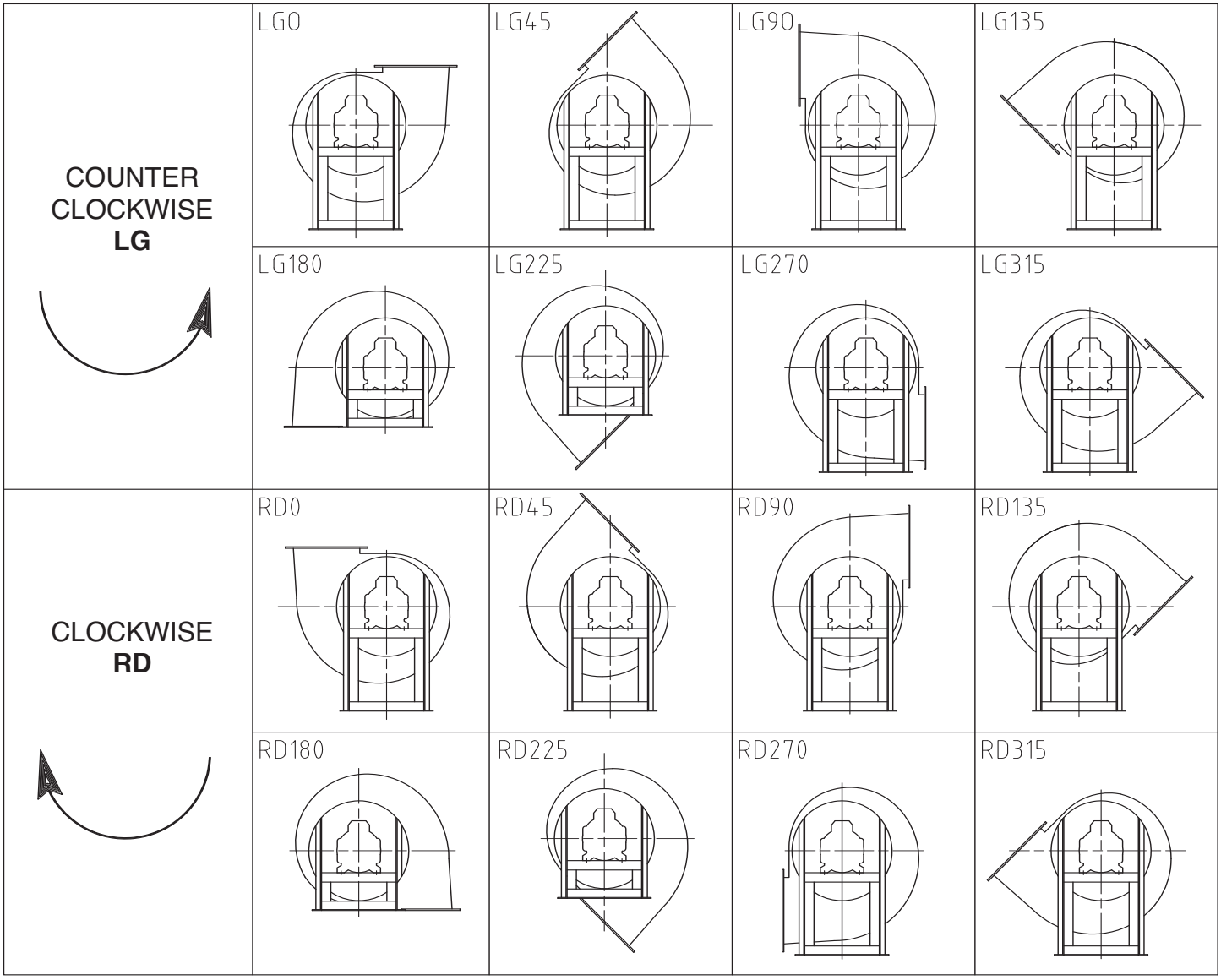

Codification

Arrangement

4	Impeller Directly Coupled To the motor

Fan size

356	315 mm
406	355 mm
456	400 mm
457	375 mm
506	450 mm
566	500 mm
567	475 mm

Outlet positions
(see page 9)

RDO	Clockwise
	Upblast
	Position

Motor Size

90L2	2,2 kW	2 poles
100L2	3 kW	2 poles
112M2	4 kW	2 poles
132SA2	5,5 kW	2 poles
132SB2	7,5 kW	2 poles
132MB2	11 kW	2 poles
160M2	11 kW	2 poles
160L2	15 kW	2 poles

ART	406	N	4	A	RDO	100L2

Fan model

ART
FI
FQ
FR

Type of blade profile

N	Backward curved

Speciality

A	Standard construction

Use and general specifications

This collection assorts all the technical information about the products that Ferrari Ventilatori S.p.A has tested and rated in conformance with the pertinent AMCA International's test standards.

All the fans in the catalogue have been tested in accordance with AMCA 210 "Laboratory Methods of Testing Fans for Certified Aerodynamic Performance Ratings" and AMCA 300 "Reverberant Room Method for Sound Testing of Fans" .

For every fan the catalogue shows drawing with overall dimensions and weights, and the aerodynamic performance charts and sound data obtained from the tests.

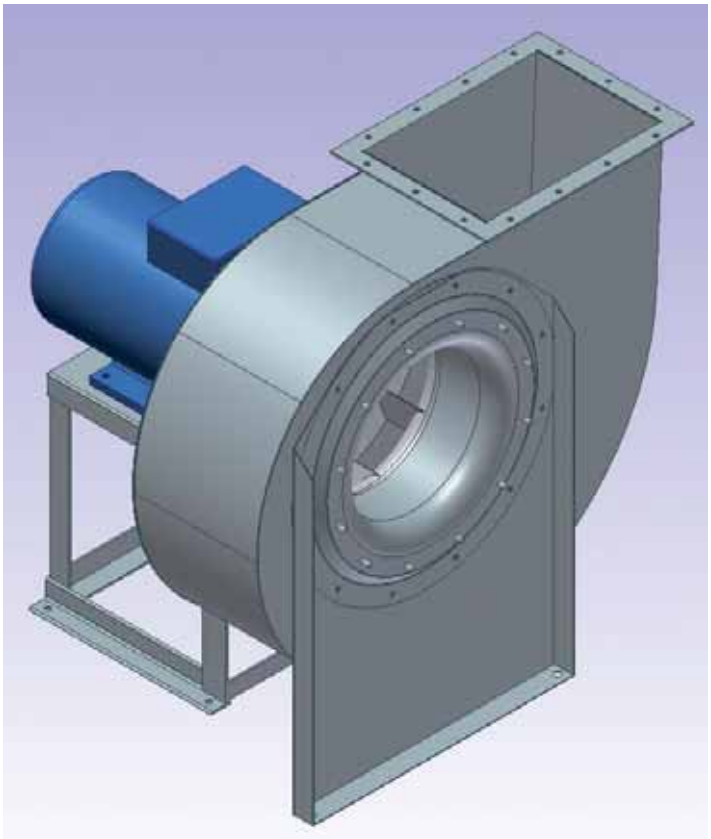

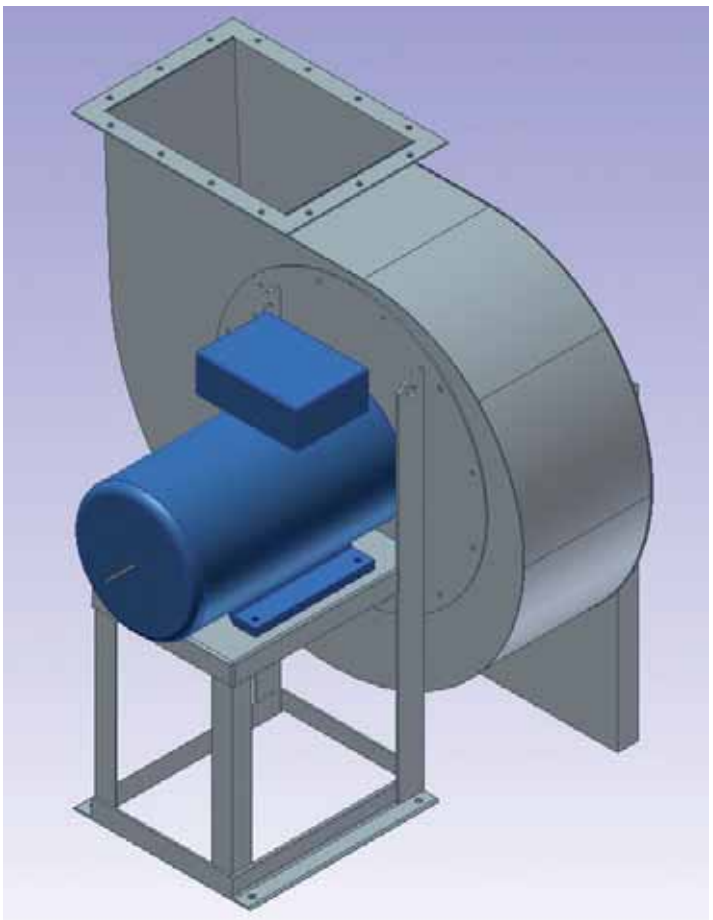

NOTE:

CENTRIFUGAL FANS

OVERALL DIMENSIONS

- **3.- OVERALL DIMENSIONS**

ART 406 N4A RDO 100L 2

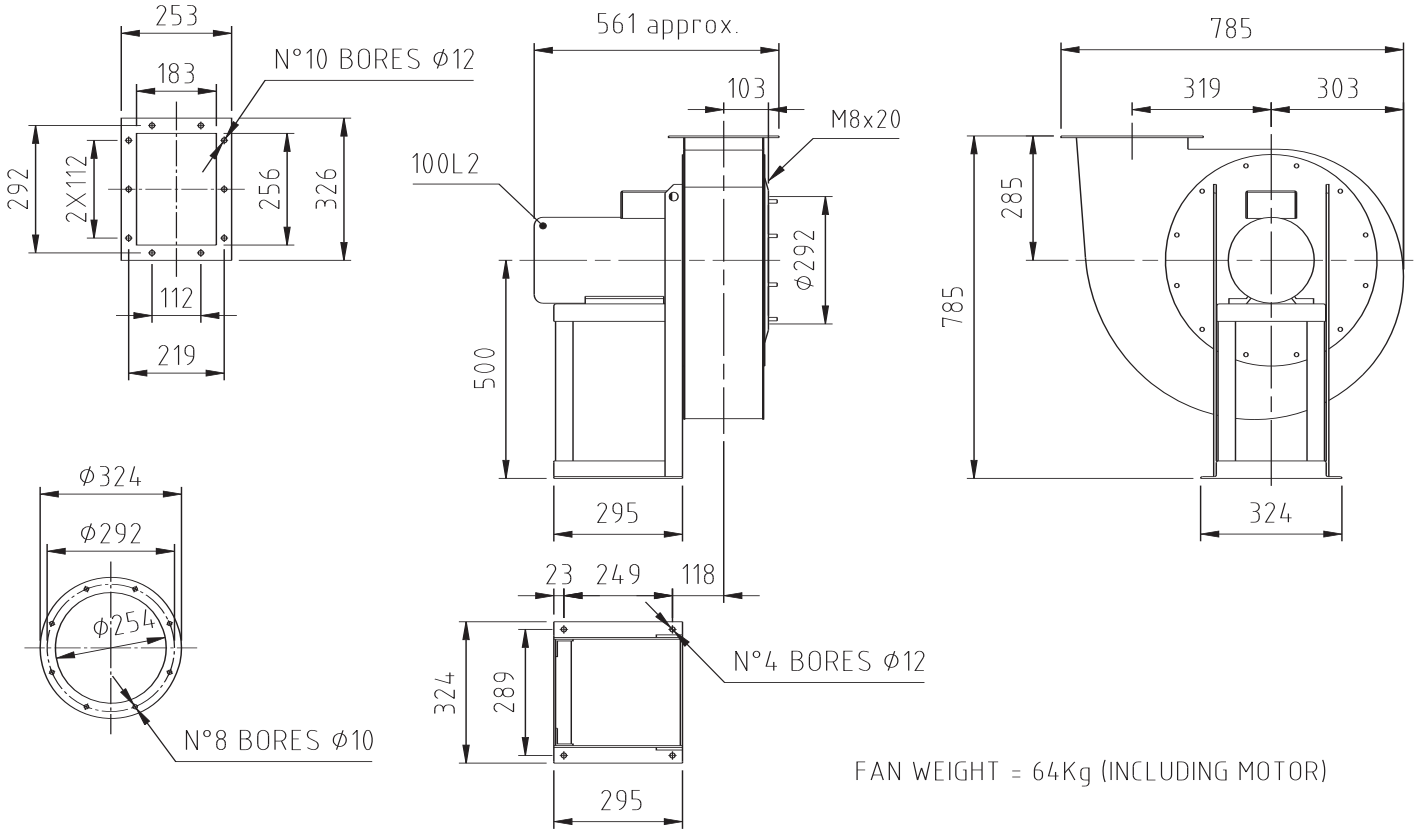

FAN WEIGHT = 64Kg (INCLUDING MOTOR)

ART 456 N4A RDO 132SA2

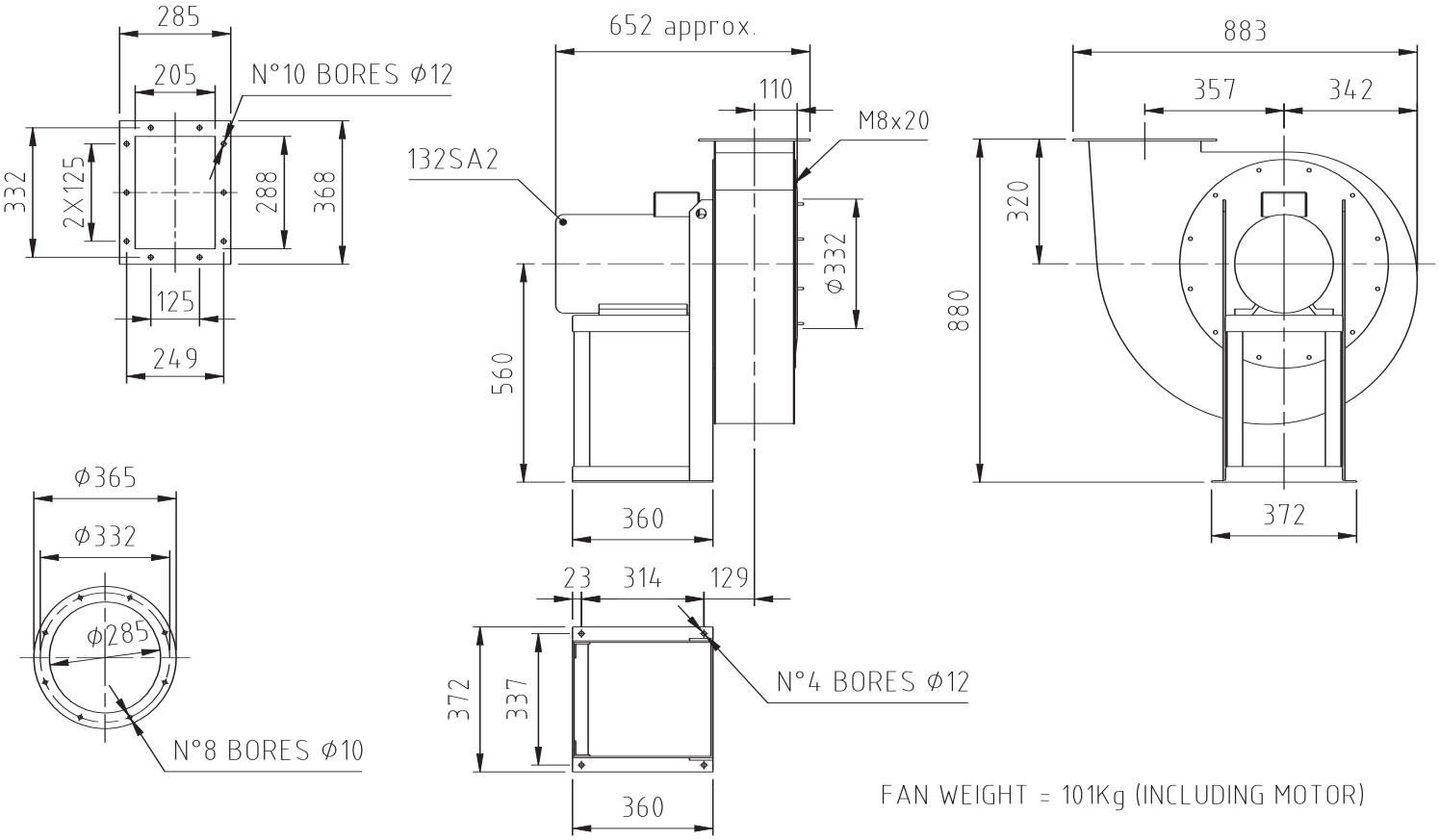

FAN WEIGHT = 101Kg (INCLUDING MOTOR)

ART 567 N4A RDO 160M2

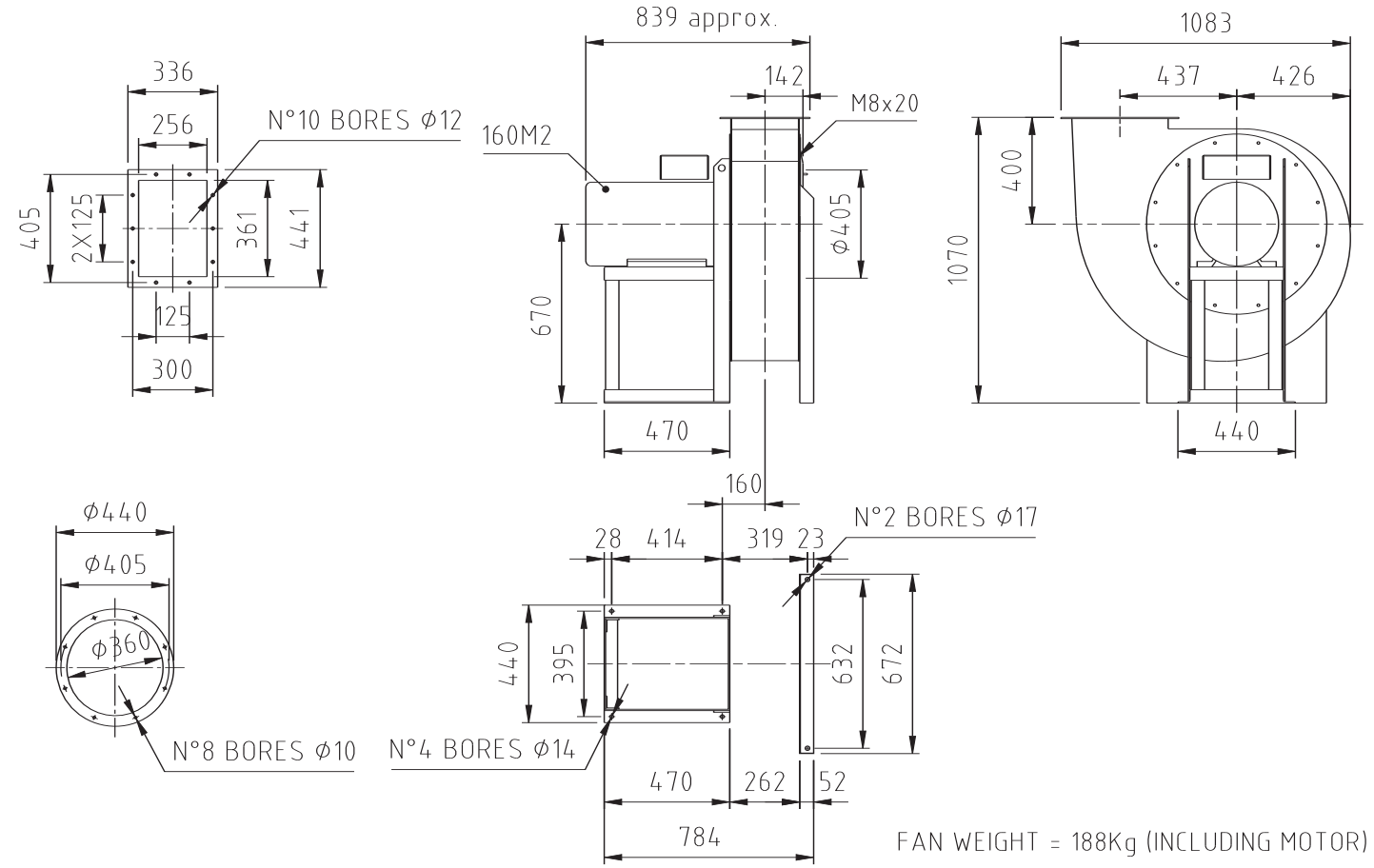

FI 506 N4A RDO 132SA2

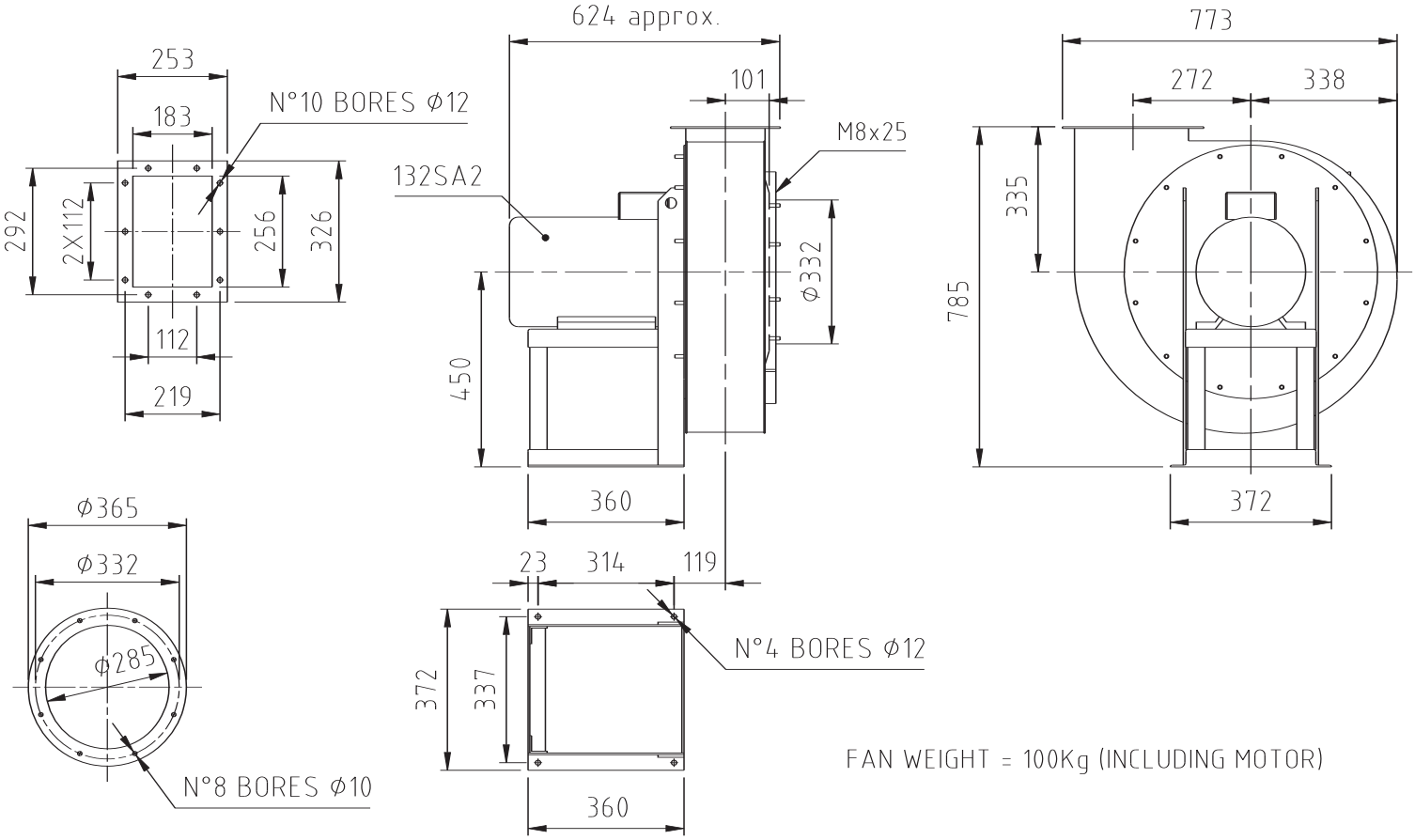

FQ 356 N4A RDO 90L 2

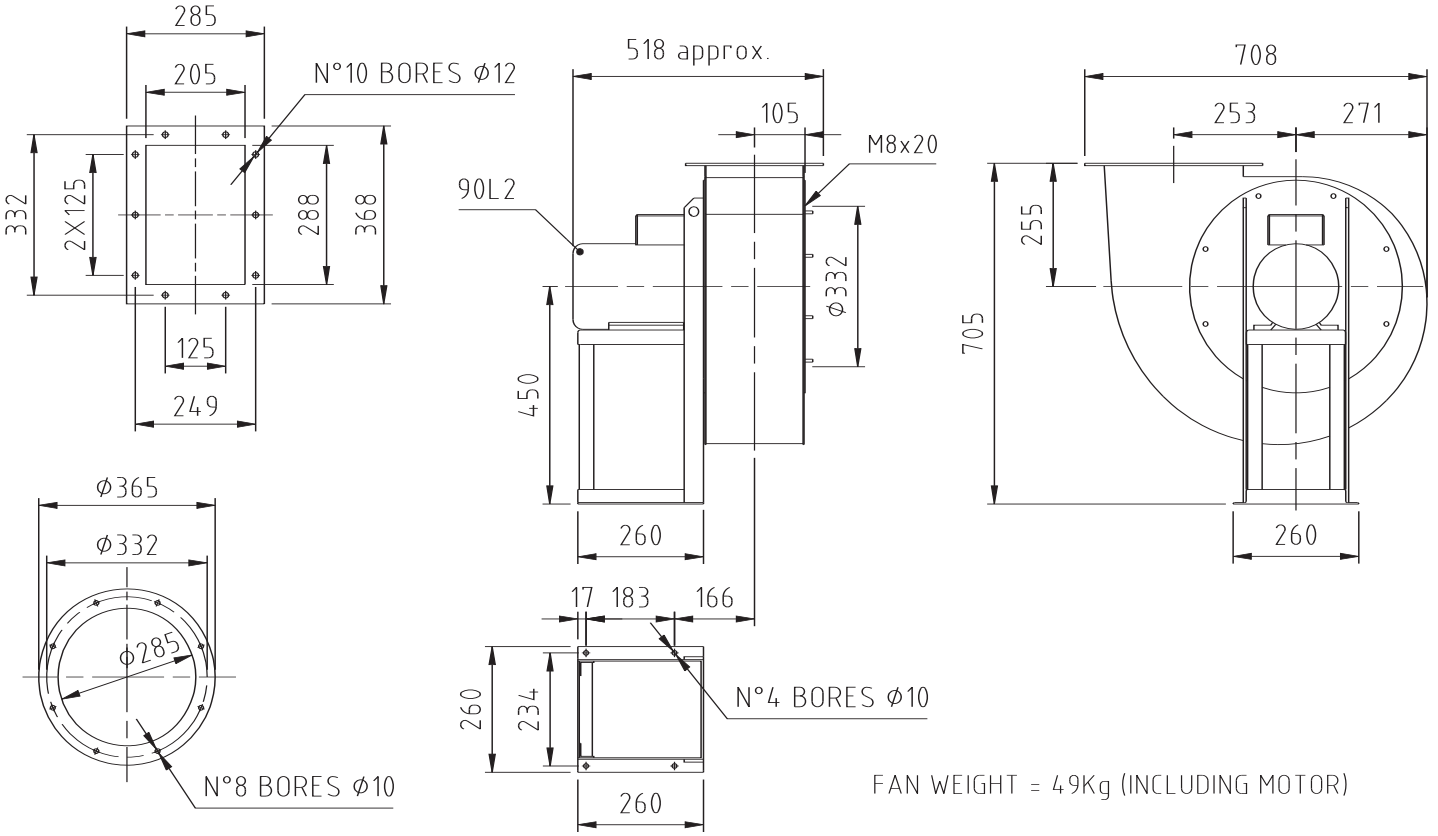

FAN WEIGHT = 49Kg (INCLUDING MOTOR)

FQ 406 N4A RDO 112M2

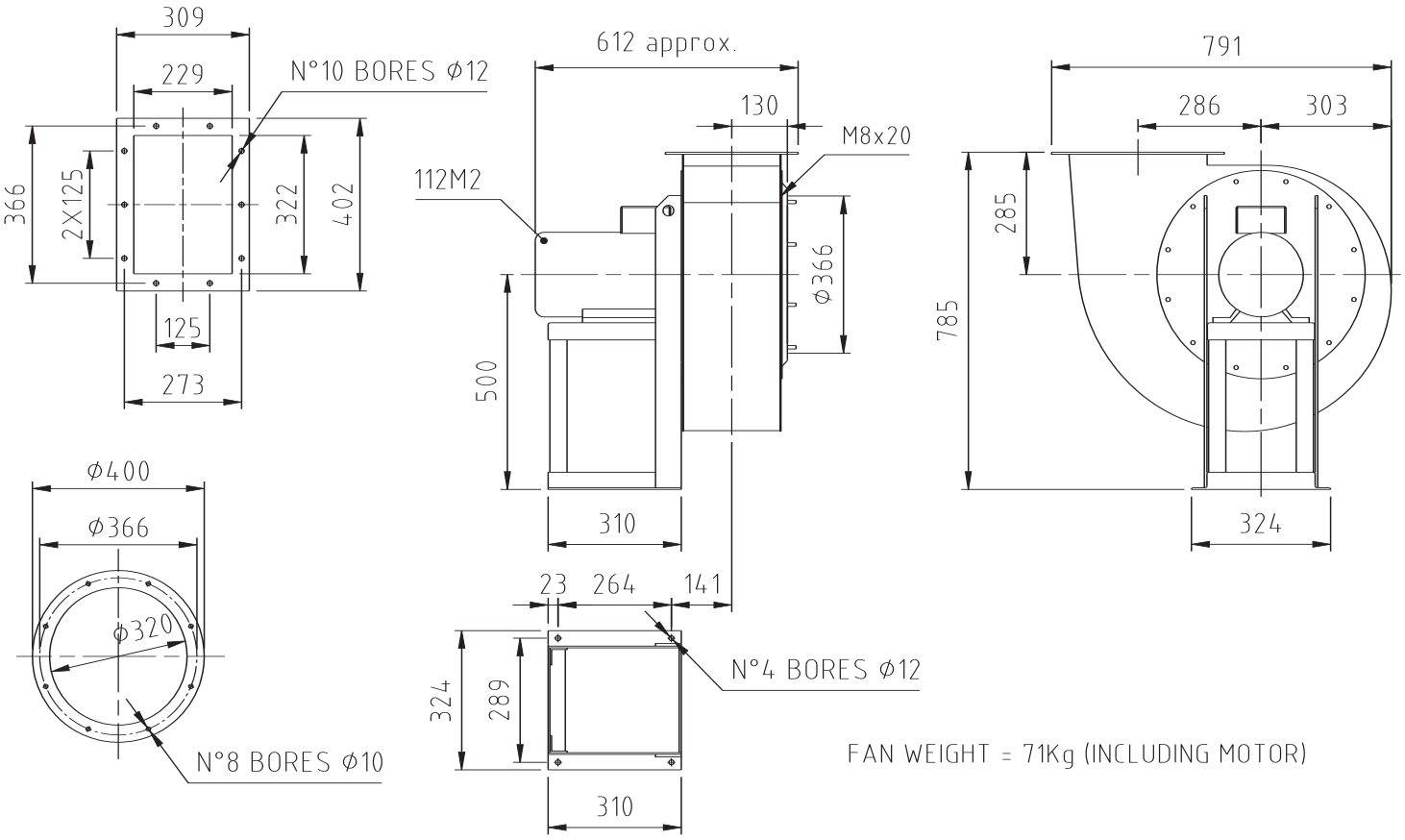

FAN WEIGHT = 71Kg (INCLUDING MOTOR)

FQ 456 N4A RDO 132SB2

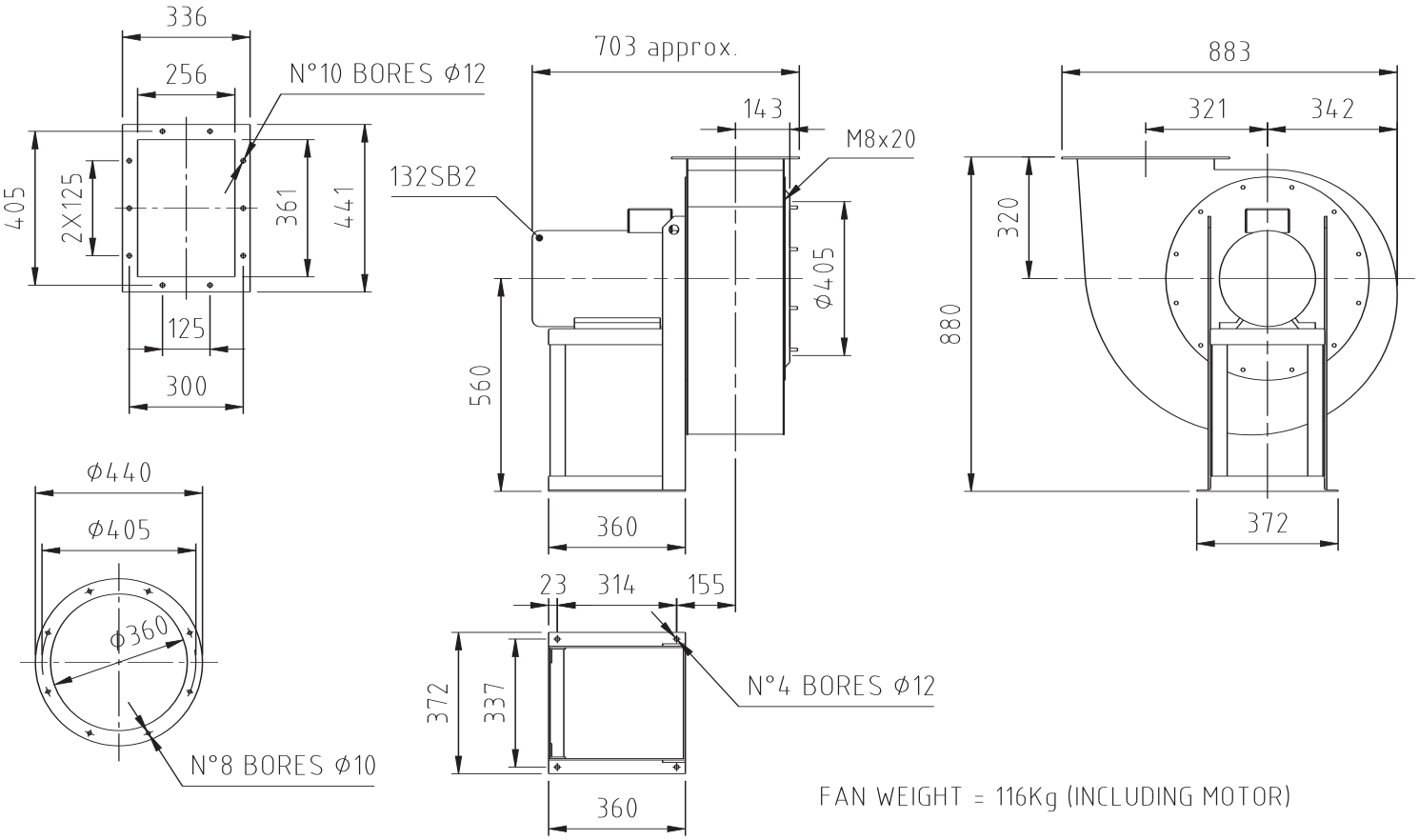

FAN WEIGHT = 116Kg (INCLUDING MOTOR)

FQ 566 N4A RDO 160L2

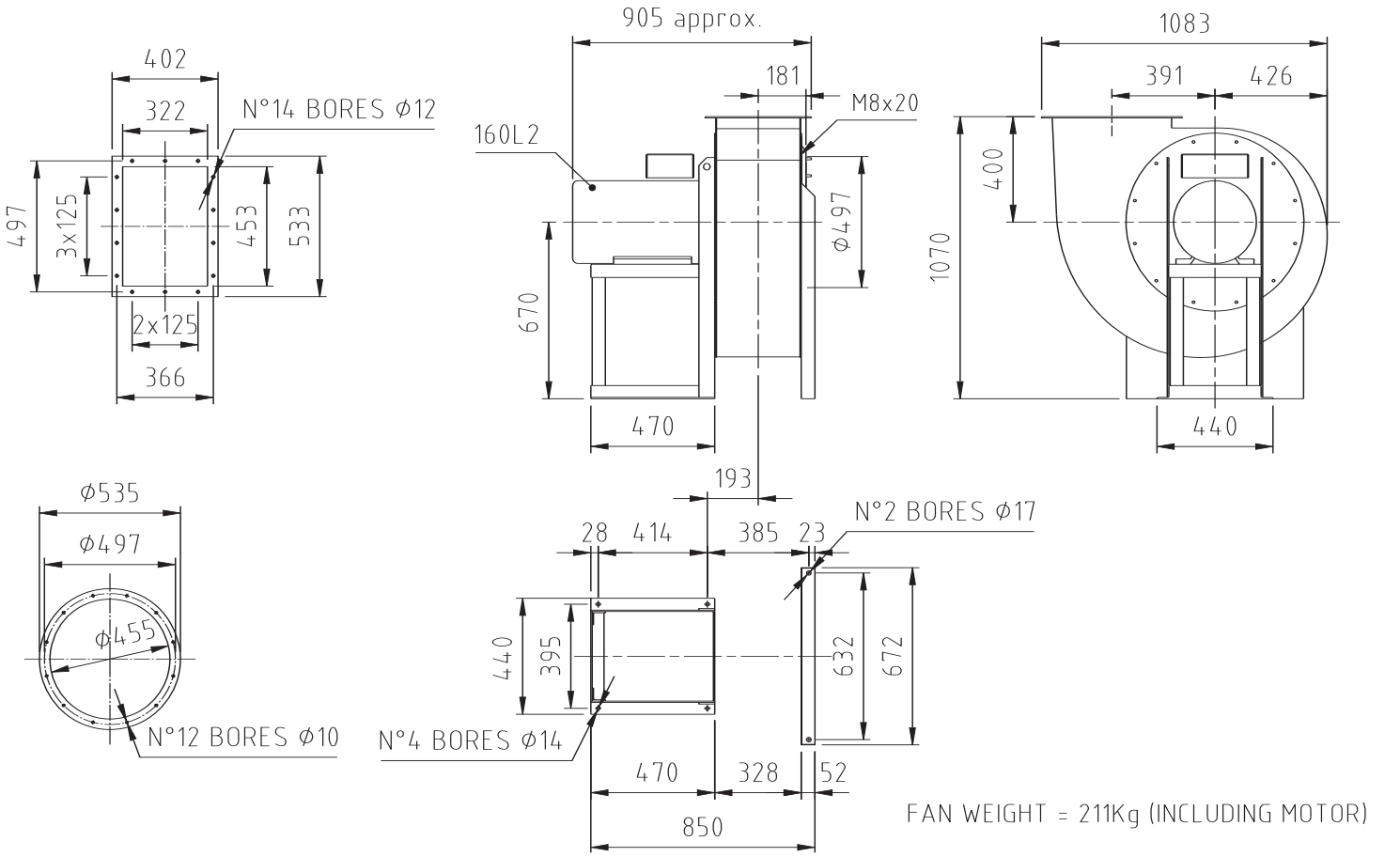

FAN WEIGHT = 211Kg (INCLUDING MOTOR)

FR 457 N4A RDO 132 MB2

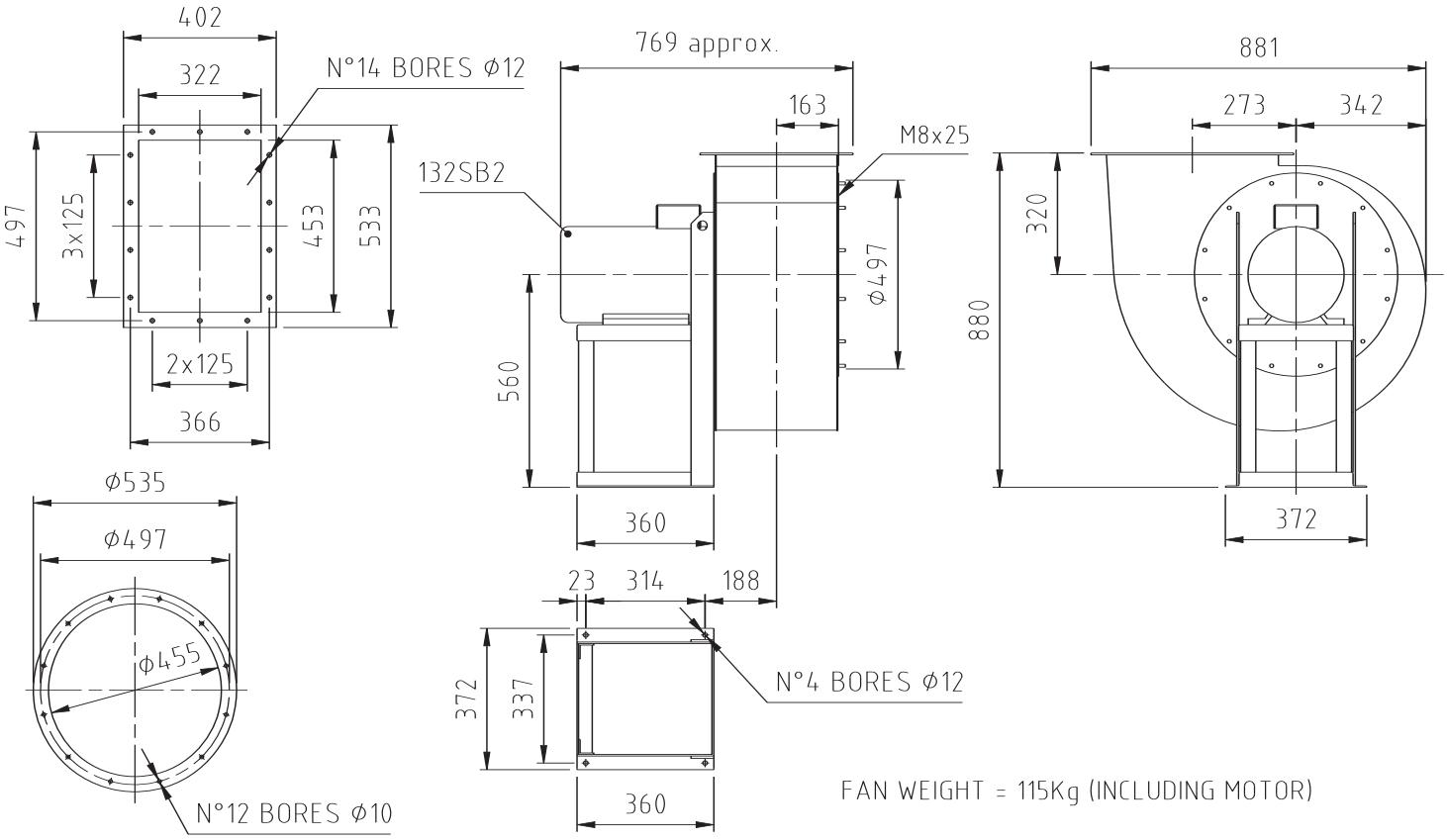

NOTE:

NOTE:

CENTRIFUGAL FANS

PERFORMANCE CURVES AND NOISE DATA

1. GUIDE TO CURVES

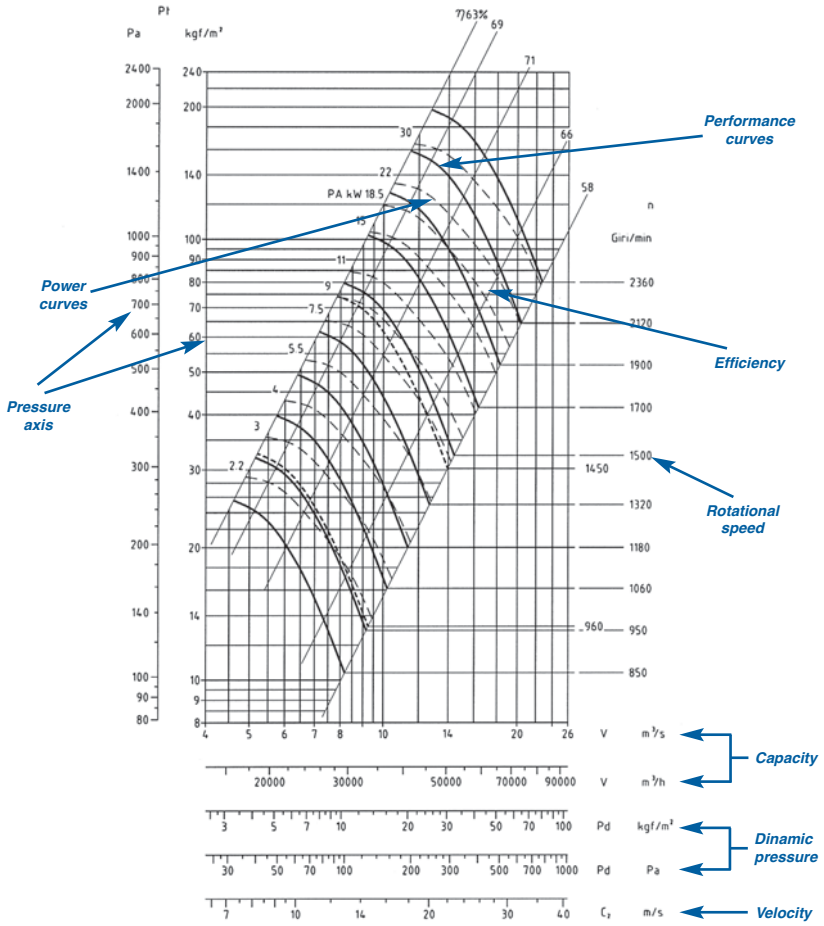

Performance curve
This is the most representative curve of the fan. It shows the total pressure provided by the fan for a range of capacities. The point of intersection of the system curve and the performance curve determines the operating point of the fan. The curve doesn't cover the entire range from free delivery (no obstruction to flow) to no delivery, but only the useful zone of the curve where the efficiency is higher. The selection of the fan shall assure that the operating point of the fan lies in the useful zone. A fan working out of this zone could create instability or overheating of the motor drive.

Efficiency
It indicates the total efficiency of the fan represent the rate between the final energy received by the air and the energy supplied shaft of the fan. This efficiency reflects the losses into the fan but not the losses in the transmission and motor.

Power curves
Those curves locate in the charts standardized motors power data. To know the absorbed power of a fan working point placed between two curves, interpolation may be done. For a more precise value, the next formula can be use:

$$W = \frac{V \times P_t}{10 \times \eta_t}$$

W= Absorbed power in kW
V= Air delivered in m³/s, shown in the capacity axis
Pt= total pressure in Pa, shown in the pressure axis
η_t = Efficiency of the fan as read in the chart in %

Since this absorbed power doesn't includes the transmission losses, so this power need to be increased by at least 15% before selecting the motor to be installed.

Example. The working point in the chart indicates a pressure of 420 Pa and a capacity of 8,75 m³/s. The efficiency shown is 71. The absorbed power is then:

$$W = \frac{V \times P_t}{100 \times \eta_t} = \frac{8{,}75 \times 420}{10 \times 71} = 5{,}17\ kW$$

This absorbed power need to be increase by 15%, so the power to be considered for the selection of the motor would be: 5,17x1,15=5,95 Kw. So a motor 5,5 kW power won't be enough and a 7,5 Kw should be used.

Rotational speed
It indicates the rotational speed of the impeller of the fan.

Pressure Axis
The ordinate axis shows the total pressure provided by the fan. This pressure can be read both in Pa and kgf/m² units.

Capacity Axis
The first two abscissa axis show the capacity supplied by fan. In the first one expressed in m³/s, while in the second one in m³/h.
The third and fourth axis present the dynamic pressure supplied by the fan in Pa and in kgf/m² This dynamic pressure can be obtained using the formula $Pd=\rho\ v^2/2$, where ρ is the density and v the velocity of the fluid.
Last axis indicates the velocity of the fluid at inlet and outlet of the fan. This velocity is obtained by dividing the air delivered by the section of the fan.

ART 406 N4A

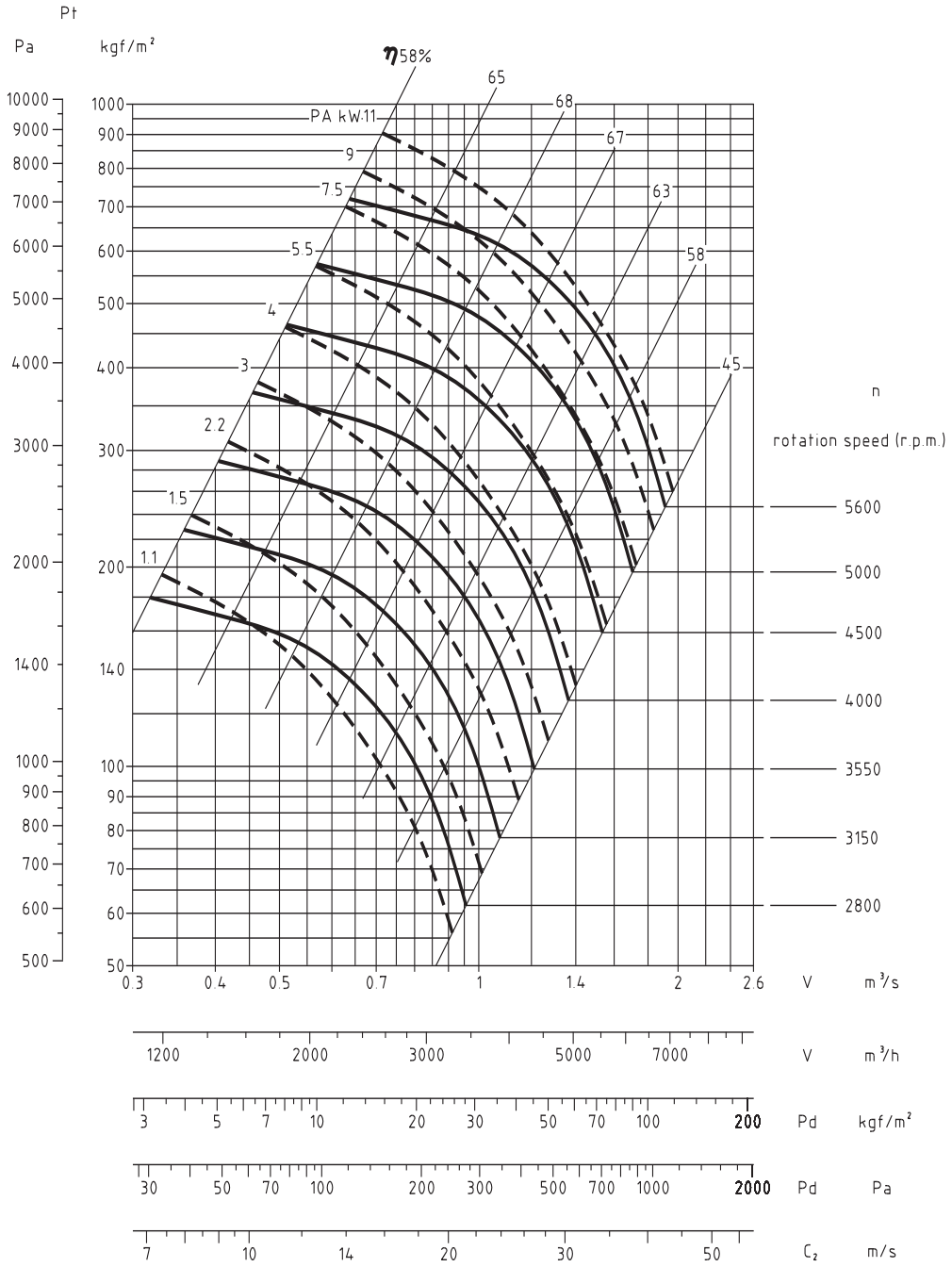

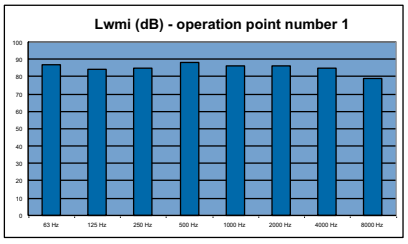

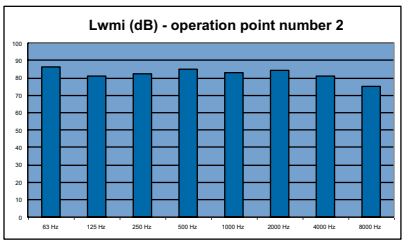

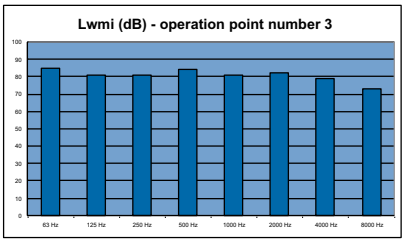

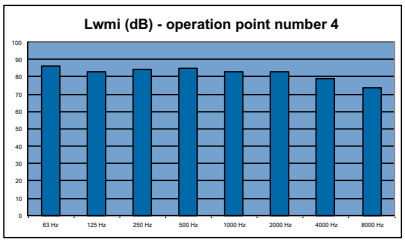

Performance certified is for installation type B: free inlet, ducted outlet.

Power rating (kW) does not include transmission losses. Performance ratings do not include the effects of appurtenances (accessories).
Values shown are for inlet Lwi sound power levels for Installation Type B: free inlet, ducted outlet.
The sound power level ratings shown are in decibels, referred to 10 watts, calculated per AMCA International Standard 301.

Lwmi (sound power level measured at the open inlet of the fan)

unit of measure dB

center frequency (Hz)								operation point			
63 Hz	125 Hz	250 Hz	500 Hz	1000 Hz	2000 Hz	4000 Hz	8000 Hz	pressure (in.wg)	flow (cfm)	rotation speed (r.p.m.)	number
87	84	85	88	86	86	85	79	0	2823	3533	1
86	81	82	85	83	84	81	75	5,3	2109	3525	2
85	81	81	84	81	82	79	73	9,1	1407	3532	3
86	83	84	85	83	83	79	74	11,3	706	3541	4

FERRARI INDUSTRIAL FAN TECHNOLOGY

ART 456 N4A

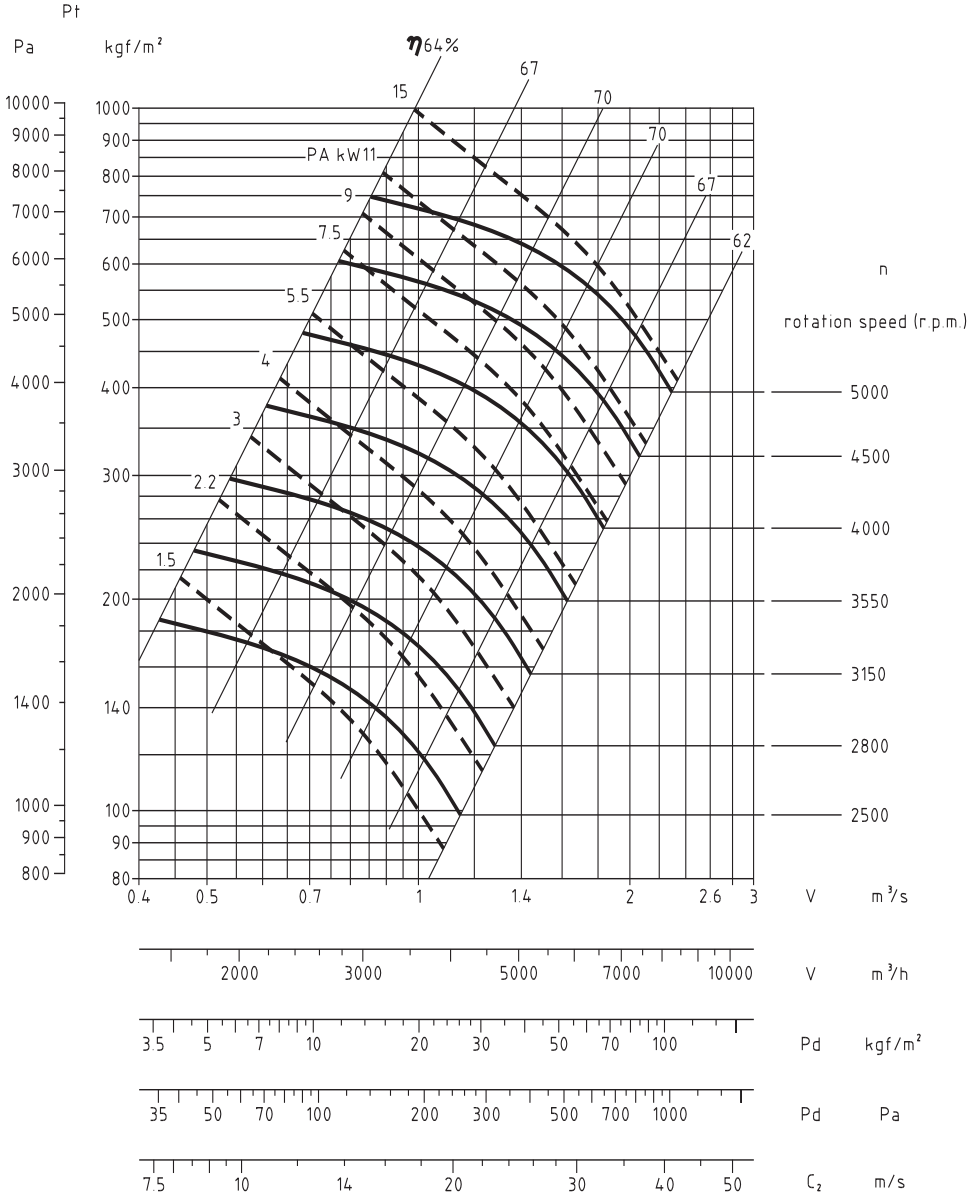

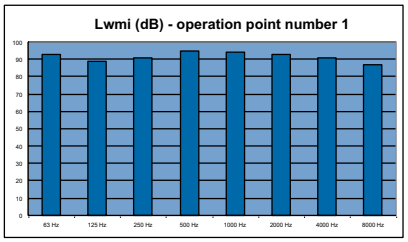

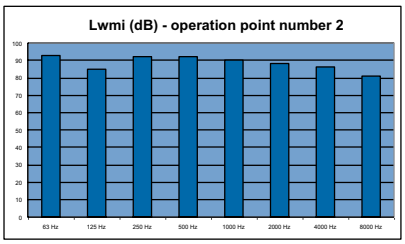

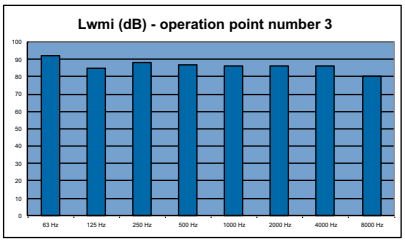

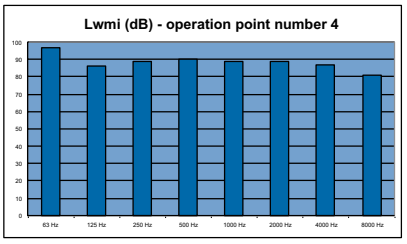

Performance certified is for installation type B: free inlet, ducted outlet.

Power rating (kW) does not include transmission losses. Performance ratings do not include the effects of appurtenances (accessories).
Values shown are for inlet Lwi sound power levels for Installation Type B: free inlet, ducted outlet.
The sound power level ratings shown are in decibels, referred to 10 watts, calculated per AMCA International Standard 301.

Lwmi (sound power level measured at the open inlet of the fan)

unit of measure dB

center frequency (Hz)								operation point			
63 Hz	125 Hz	250 Hz	500 Hz	1000 Hz	2000 Hz	4000 Hz	8000 Hz	pressure (in.wg)	flow (cfm)	rotation speed (r.p.m.)	number
93	89	91	95	94	93	91	87	0	4304	3542	1
93	85	92	92	90	88	86	81	6,9	3215	3536	2
92	85	88	87	86	86	86	80	11,65	2183	3541	3
97	86	89	90	89	89	87	81	14,6	1061	3556	4

ART 567 N4A

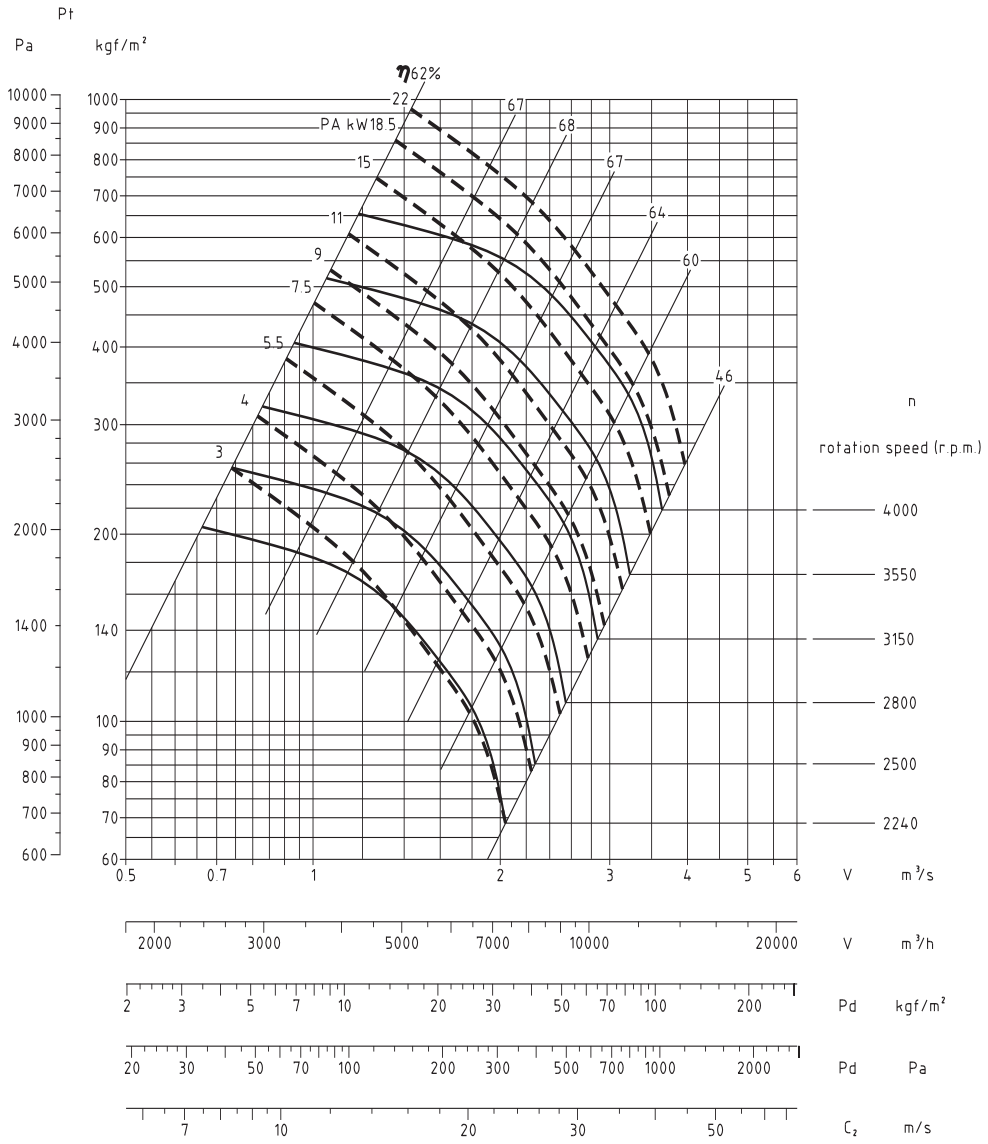

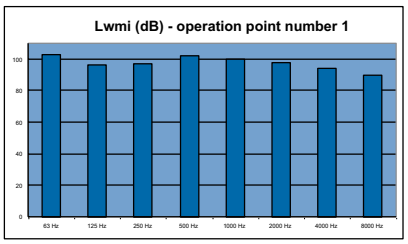

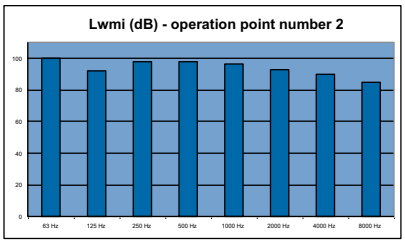

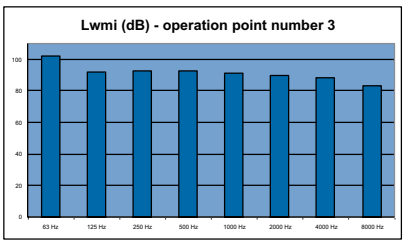

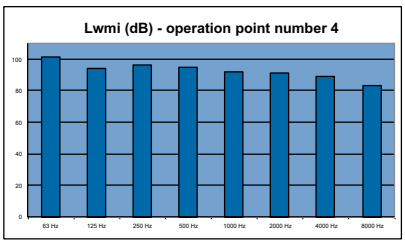

Performance certified is for installation type B: free inlet, ducted outlet.

Power rating (kW) does not include transmission losses. Performance ratings do not include the effects of appurtenances (accessories).
Values shown are for inlet Lwi sound power levels for Installation Type B: free inlet, ducted outlet.
The sound power level ratings shown are in decibels, referred to 10 watts, calculated per AMCA International Standard 301.

Lwmi (sound power level measured at the open inlet of the fan)
unit of measure dB

center frequency (Hz)								operation point			
63 Hz	125 Hz	250 Hz	500 Hz	1000 Hz	2000 Hz	4000 Hz	8000 Hz	pressure (in.wg)	flow (cfm)	rotation speed (r.p.m.)	number
103	96	97	102	100	98	94	90	0	7582	3571	1
100	92	98	98	96	93	90	85	9,5	5682	3570	2
102	92	93	93	91	90	88	83	16,26	3833	3573	3
101	94	96	95	92	91	89	83	20,5	1915	3578	4

FI 506 N4A

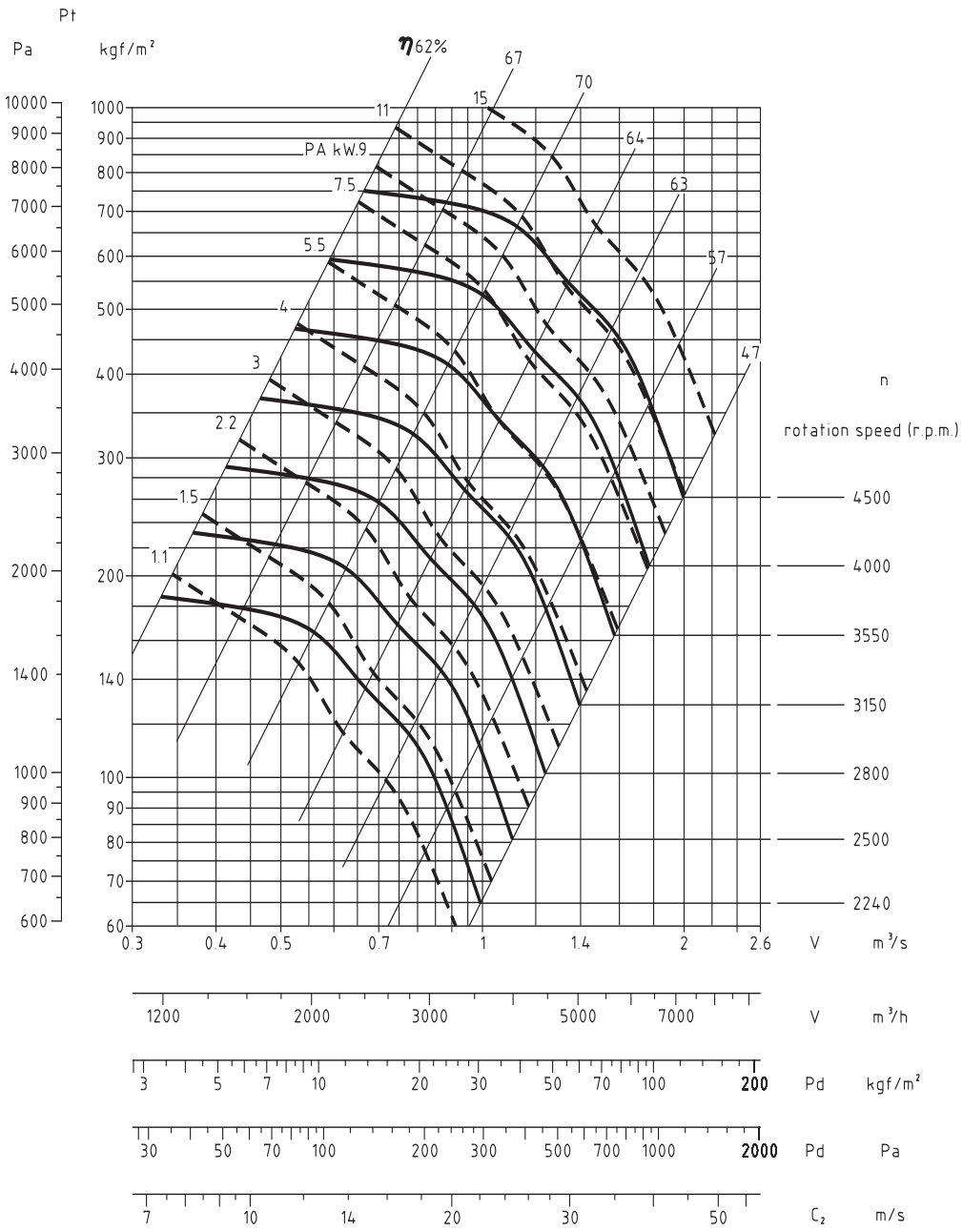

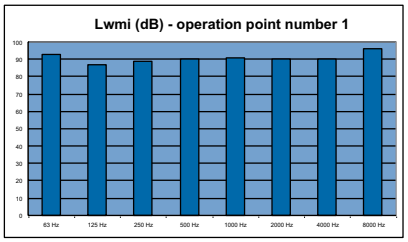

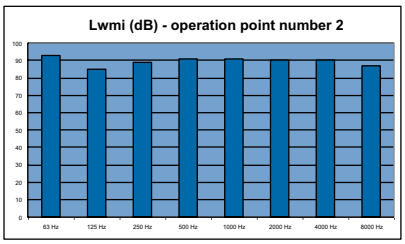

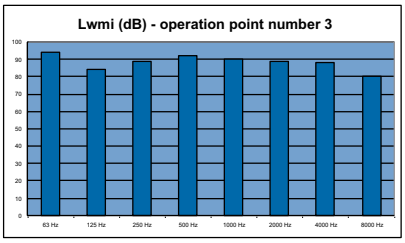

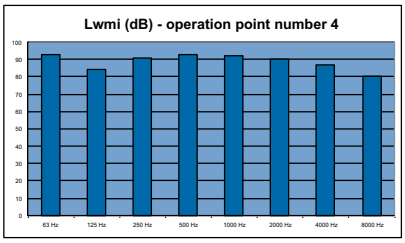

Performance certified is for installation type B: free inlet, ducted outlet.

Power rating (kW) does not include transmission losses. Performance ratings do not include the effects of appurtenances (accessories).
Values shown are for inlet Lwi sound power levels for Installation Type B: free inlet, ducted outlet.
The sound power level ratings shown are in decibels, referred to 10 watts, calculated per AMCA International Standard 301.

Lwmi (sound power level measured at the open inlet of the fan)

unit of measure dB

center frequency (Hz)								operation point			
								pressure (in.wg)	flow (cfm)	rotation speed (r.p.m.)	number
63 Hz	125 Hz	250 Hz	500 Hz	1000 Hz	2000 Hz	4000 Hz	8000 Hz				
93	87	89	90	91	90	90	96	0	3670	3537	1
93	85	89	91	91	90	90	87	7,8	2754	3526	2
94	84	89	92	90	89	88	80	15,4	1830	3530	3
93	84	91	93	92	90	87	80	18,03	905	3541	4

FQ 356 N4A

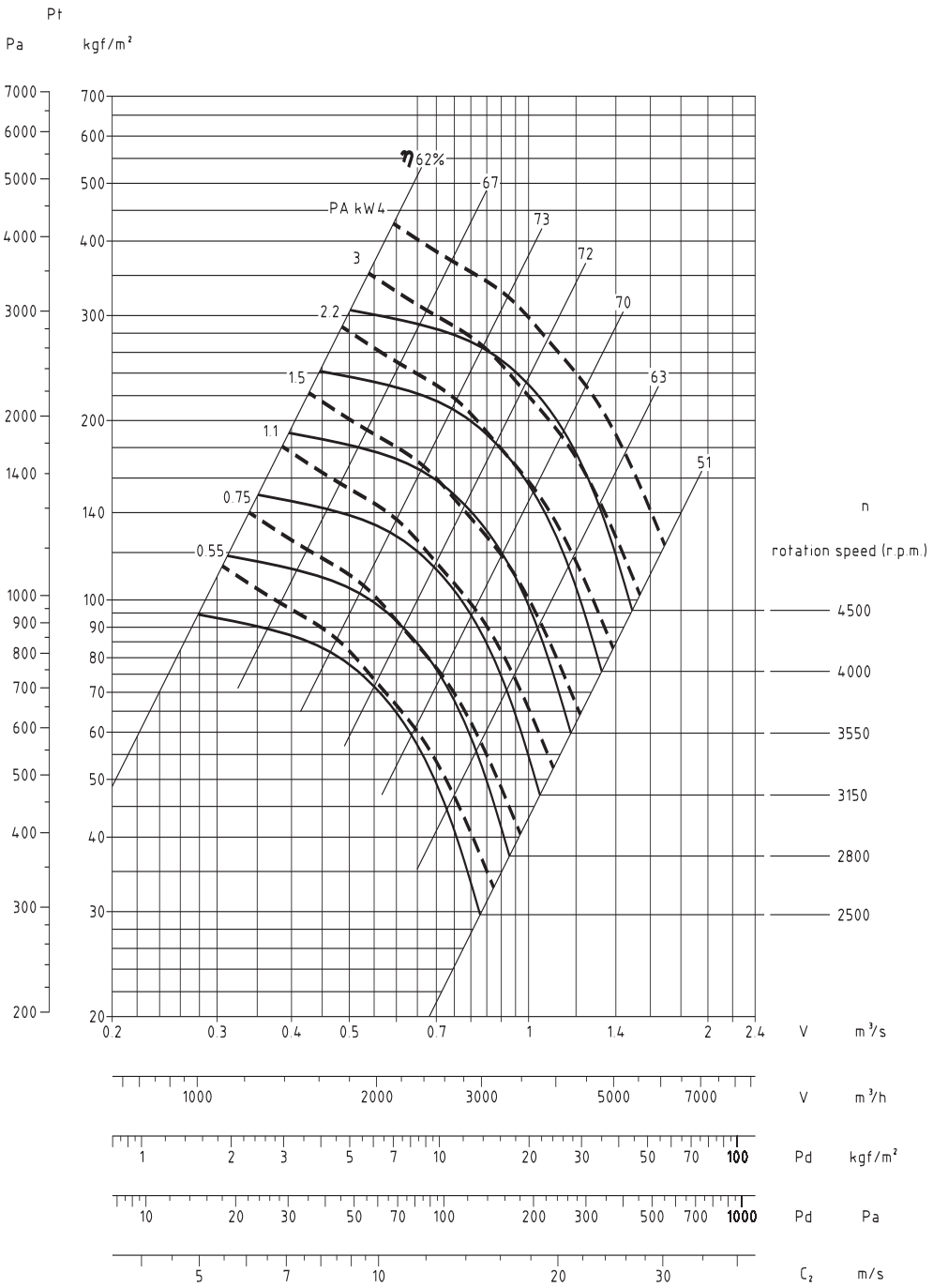

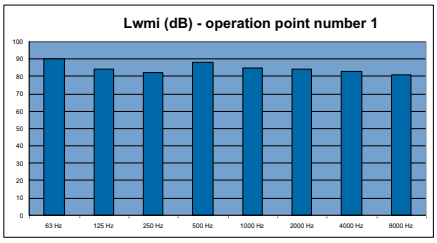

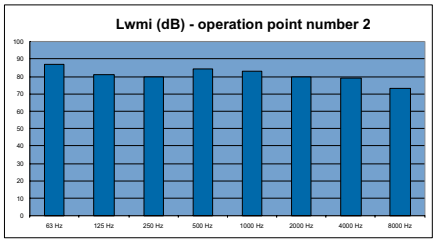

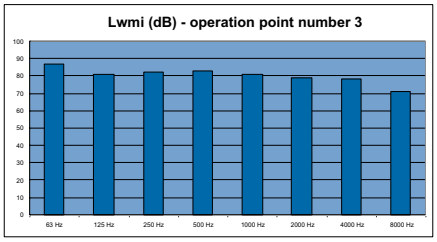

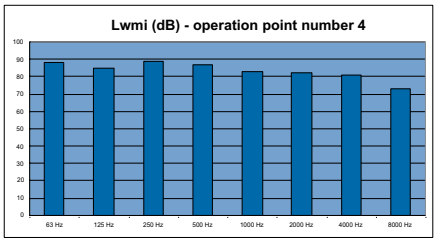

Performance certified is for installation type B: free inlet, ducted outlet.

Power rating (kW) does not include transmission losses. Performance ratings do not include the effects of appurtenances (accessories).
Values shown are for inlet Lwi sound power levels for Installation Type B: free inlet, ducted outlet.
The sound power level ratings shown are in decibels, referred to 10 watts, calculated per AMCA International Standard 301.

Lwmi (sound power level measured at the open inlet of the fan)

unit of measure dB

center frequency (Hz)								operation point			
63 Hz	125 Hz	250 Hz	500 Hz	1000 Hz	2000 Hz	4000 Hz	8000 Hz	pressure (in.wg)	flow (cfm)	rotation speed (r.p.m.)	number
90	84	82	88	85	84	83	81	0	2790	3554	1
87	81	80	84	83	80	79	73	3,25	2076	3544	2
87	81	82	83	81	79	78	71	6	1391	3542	3
88	85	89	87	83	82	81	73	7,4	685	3552	4

FQ 406 N4A

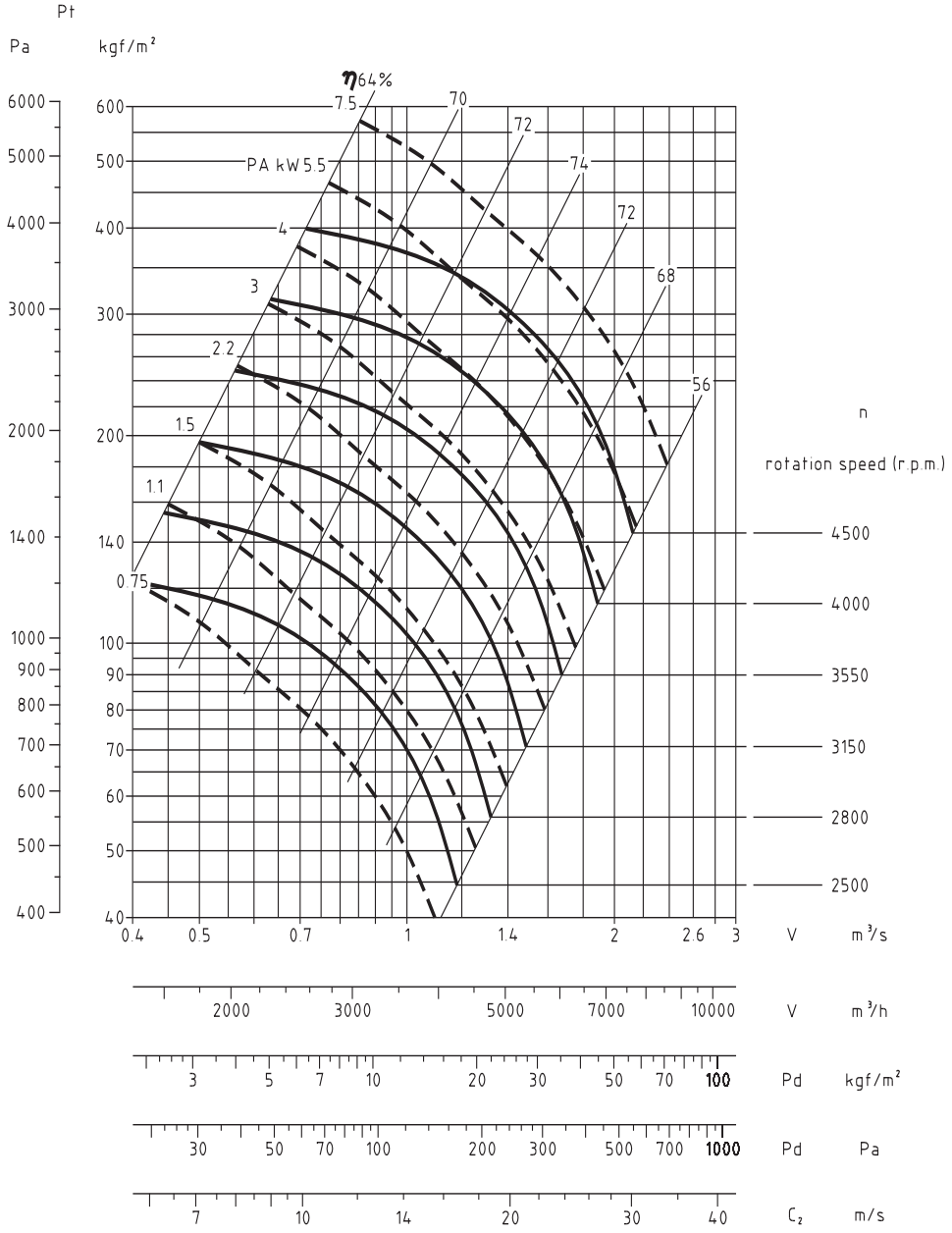

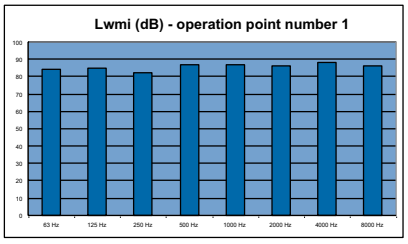

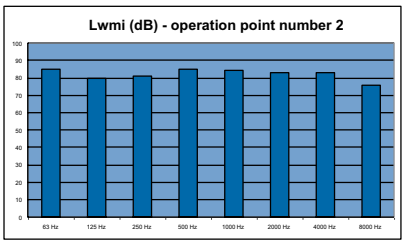

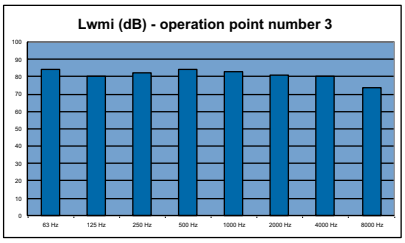

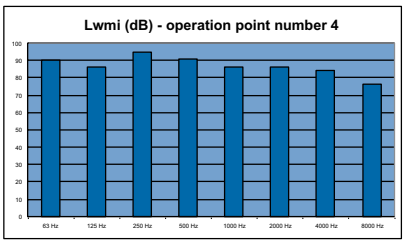

Performance certified is for installation type B: free inlet, ducted outlet.

Power rating (kW) does not include transmission losses. Performance ratings do not include the effects of appurtenances (accessories).
Values shown are for inlet Lwi sound power levels for Installation Type B: free inlet, ducted outlet.
The sound power level ratings shown are in decibels, referred to 10 watts, calculated per AMCA International Standard 301.

Lwmi (sound power level measured at the open inlet of the fan)

unit of measure dB

center frequency (Hz)								operation point			
								pressure (in.wg)	flow (cfm)	rotation speed (r.p.m.)	number
63 Hz	125 Hz	250 Hz	500 Hz	1000 Hz	2000 Hz	4000 Hz	8000 Hz				
84	85	82	87	87	86	88	86	0	3958	3562	1
85	80	81	85	84	83	83	76	4,8	2963	3556	2
84	80	82	84	83	81	80	74	8	1984	3556	3
90	86	95	91	86	86	84	76	9,9	983	3568	4

FQ 456 N4A

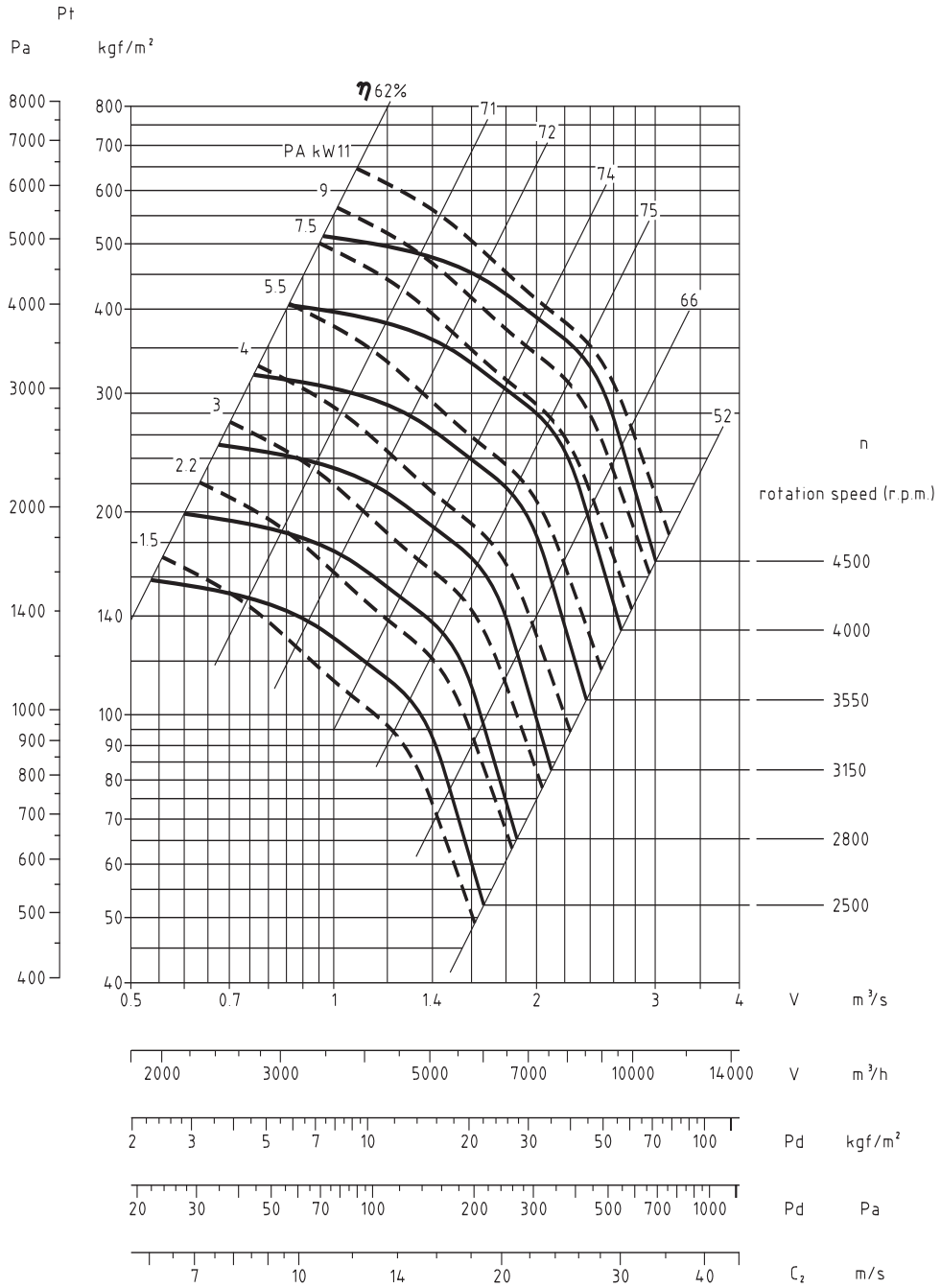

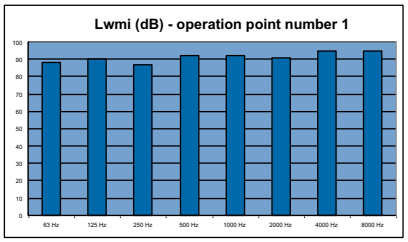

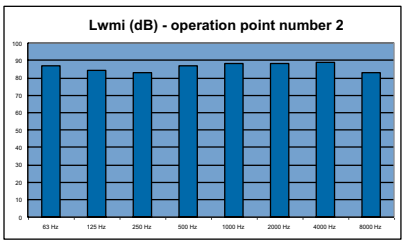

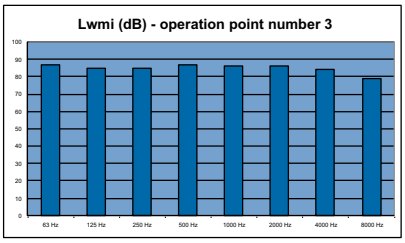

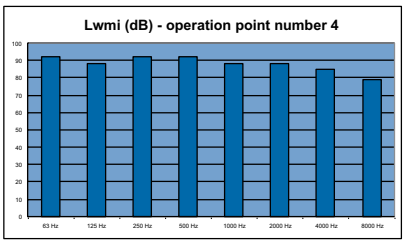

Performance certified is for installation type B: free inlet, ducted outlet.

Power rating (kW) does not include transmission losses. Performance ratings do not include the effects of appurtenances (accessories).
Values shown are for inlet Lwi sound power levels for Installation Type B: free inlet, ducted outlet.
The sound power level ratings shown are in decibels, referred to 10 watts, calculated per AMCA International Standard 301.

Lwmi (sound power level measured at the open inlet of the fan)
unit of measure dB

center frequency (Hz)								operation point			
63 Hz	125 Hz	250 Hz	500 Hz	1000 Hz	2000 Hz	4000 Hz	8000 Hz	pressure (in.wg)	flow (cfm)	rotation speed (r.p.m.)	number
88	90	87	92	92	91	95	95	0	5571	3567	1
87	84	83	87	88	88	89	83	6,1	4170	3558	2
87	85	85	87	86	86	84	79	10,39	2772	3559	3
92	88	92	92	88	88	85	79	12,2	1409	3563	4

FQ 566 N4A

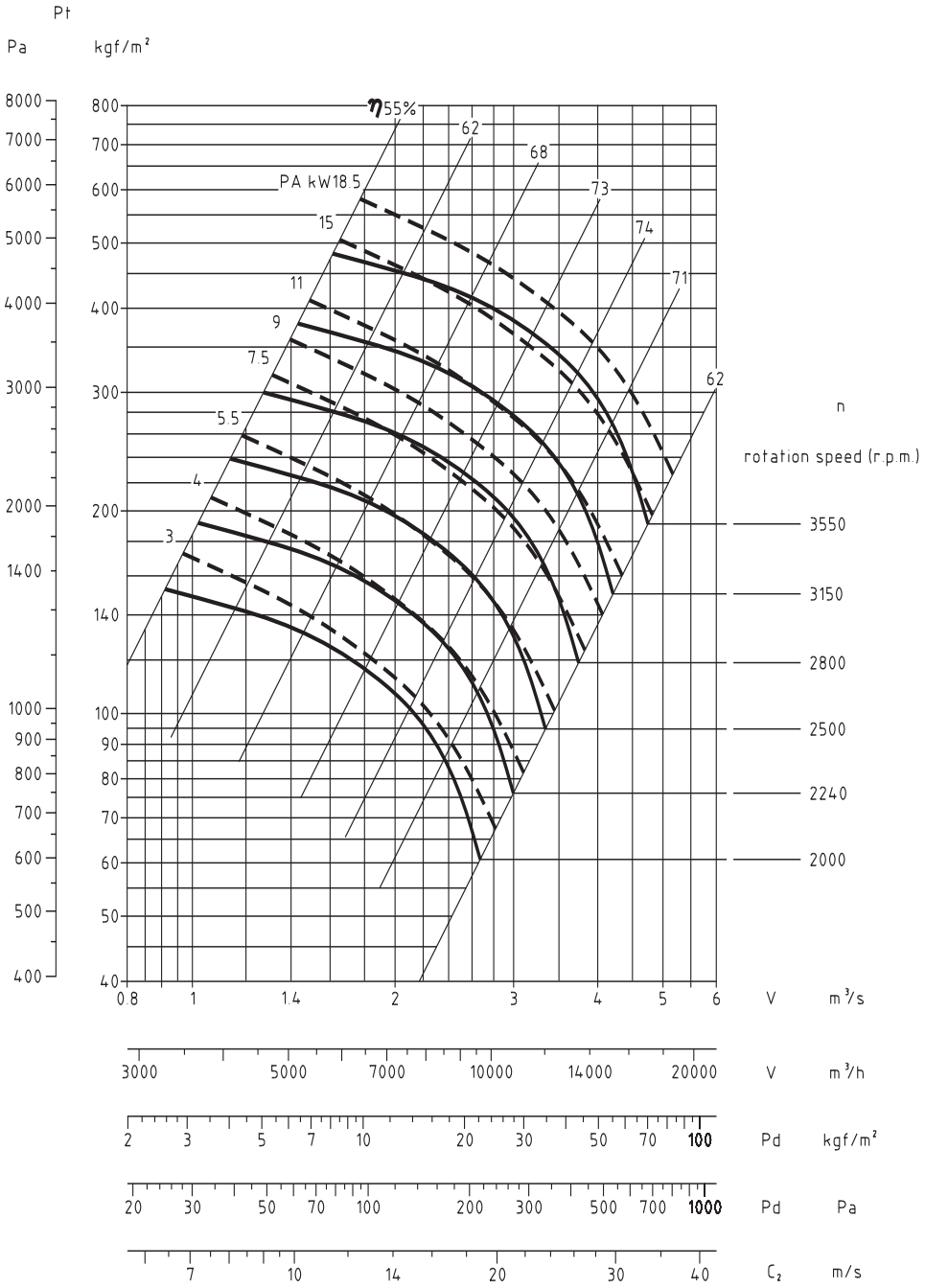

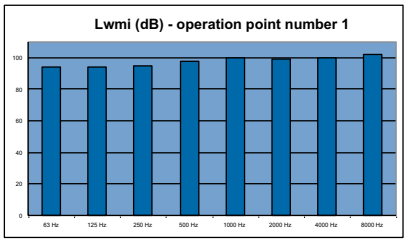

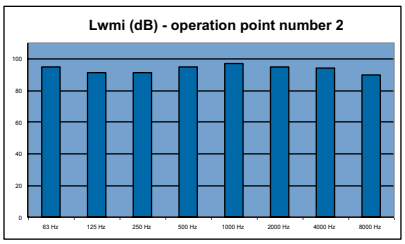

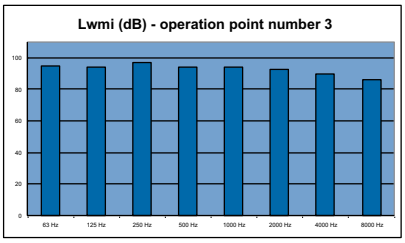

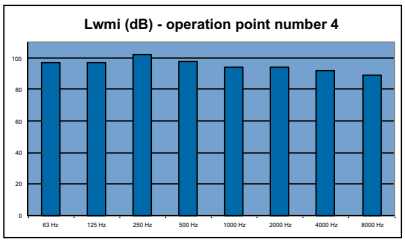

Performance certified is for installation type B: free inlet, ducted outlet.

Power rating (kW) does not include transmission losses. Performance ratings do not include the effects of appurtenances (accessories).
Values shown are for inlet Lwi sound power levels for Installation Type B: free inlet, ducted outlet.
The sound power level ratings shown are in decibels, referred to 10 watts, calculated per AMCA International Standard 301.

Lwmi (sound power level measured at the open inlet of the fan)
unit of measure dB

center frequency (Hz)								operation point			
63 Hz	125 Hz	250 Hz	500 Hz	1000 Hz	2000 Hz	4000 Hz	8000 Hz	pressure (in.wg)	flow (cfm)	rotation speed (r.p.m.)	number
94	94	95	98	100	99	100	102	0	11161	3577	1
95	91	91	95	97	95	94	90	10,25	8323	3570	2
95	94	97	94	94	93	90	86	15,75	5616	3570	3
97	97	102	98	94	94	92	89	19	2811	3574	4

FR 457 N4A

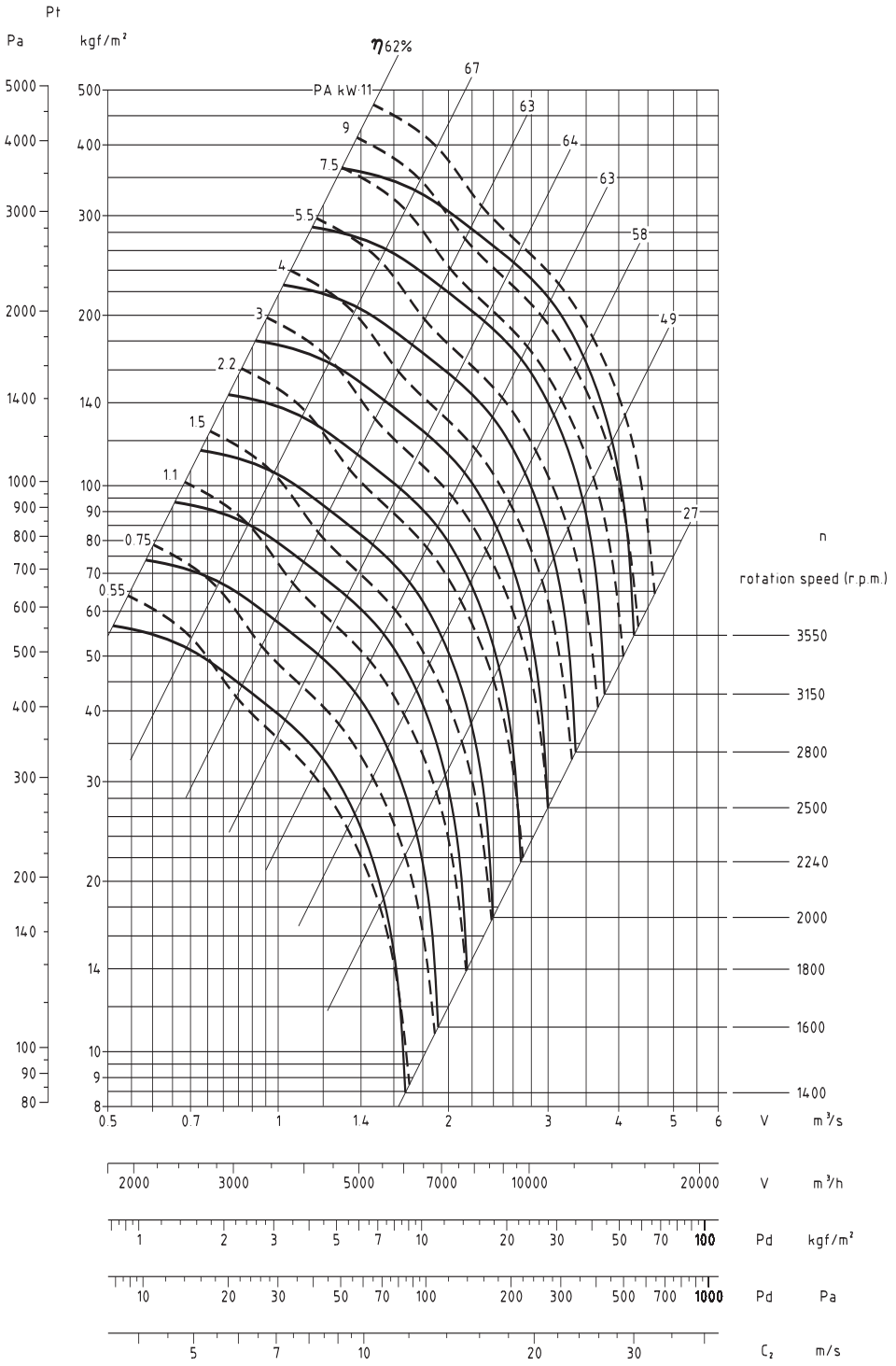

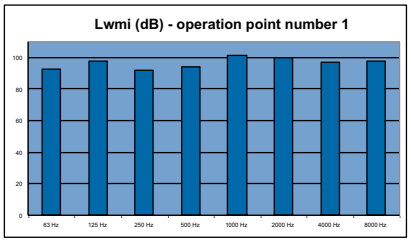

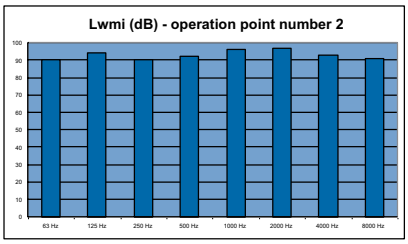

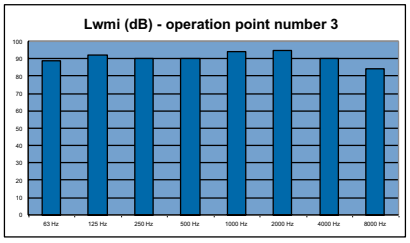

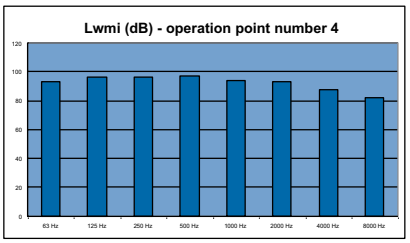

Performance certified is for installation type B: free inlet, ducted outlet.

Power rating (kW) does not include transmission losses. Performance ratings do not include the effects of appurtenances (accessories).
Values shown are for inlet Lwi sound power levels for Installation Type B: free inlet, ducted outlet.
The sound power level ratings shown are in decibels, referred to 10 watts, calculated per AMCA International Standard 301.

Lwmi (sound power level measured at the open inlet of the fan)
unit of measure dB

center frequency (Hz)								operation point			
								pressure (in.wg)	flow (cfm)	rotation speed (r.p.m.)	number
63 Hz	125 Hz	250 Hz	500 Hz	1000 Hz	2000 Hz	4000 Hz	8000 Hz				
93	98	92	94	101	100	97	98	0	8927	3518	1
90	94	90	92	96	97	93	91	6,3	6624	3500	2
89	92	90	90	94	95	90	84	10,4	4449	3500	3
93	96	96	97	94	93	88	82	14,15	2237	3520	4

CENTRIFUGAL FANS

ACCESSORIES

ACCESSORIES

1. STABILIZERS FOR ANTIVIBRATION MOUNTS

Use: when AVMS are required this accessory helps to stabilize the whole fan structure.

MOTOR SIZE	FAN TYPE	BOLT	FIG.
90	FQ 356	M8x20	1
100	ART 406	M10x25	2
112	FQ 406	M10x25	3
132	ART 456 FI 506 FQ 456 FR 457	M10x25	4

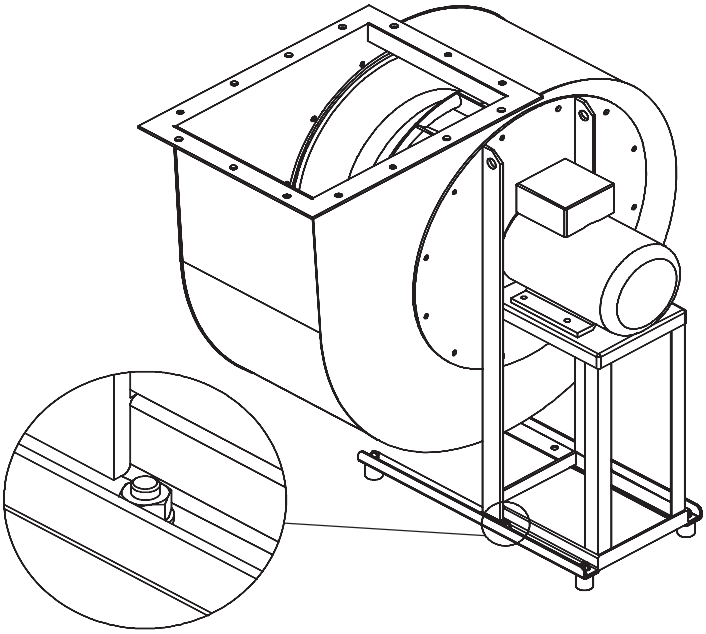

FIG. 1

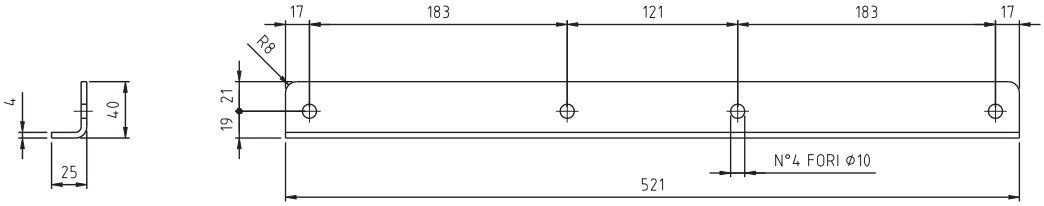

FIG. 2

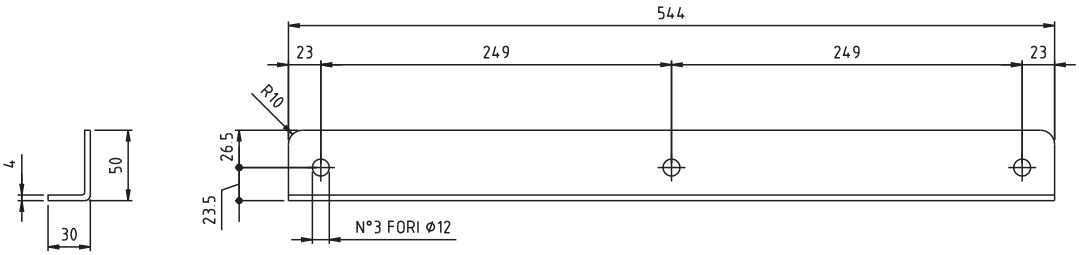

FIG. 3

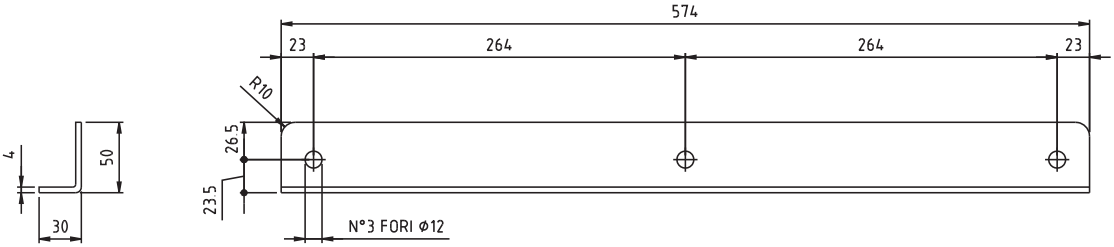

FIG. 4

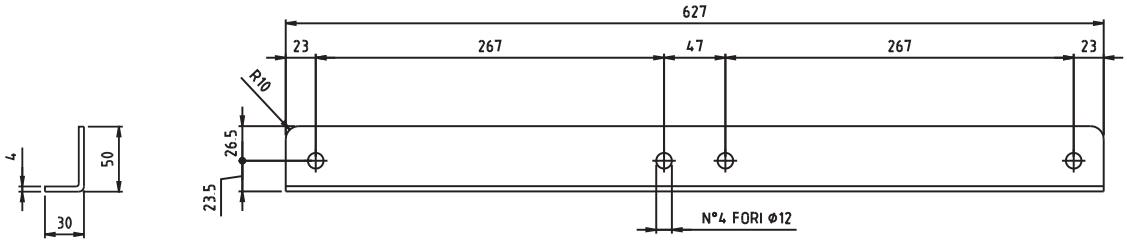

2. ANTIVIBRATION MOUNTS

Use: they are used to avoid the transmission of noise and vibrations.
They are of special metal-rubber. Working temperature - 20 °C + 60 °C.

FAN TYPE	N°	AVMS TYPE
ART 406	4	AM 30
ART 456	4	AM 30
ART 457	4	AM 30
FI 506	4	AM 30
FQ 356	4	AM 25

FAN TYPE	N°	AVMS TYPE
FQ 406	4	AM 30
FQ 456	4	AM 30
FQ 566	4	AM 50
FR 457	4	AM 30

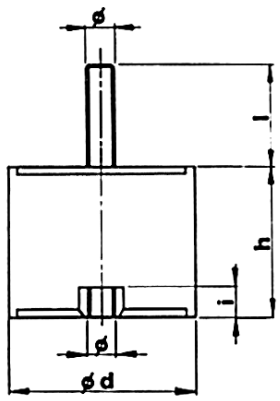

TYPE	Load for 4 supports Kg	b	h	Ø	l	i	Weight Kg
AM25	41÷80	25	20	M6	16	5	0,03
AM30	81÷140	30	30	M8	20	6	0,05
AM40	141÷224	40	30	M8	23	6	0,1
AM50	225÷315	50	40	M10	28	7	0,2

3. FIXING PLATES

Use: they are used to connect the AVMS to the ground.

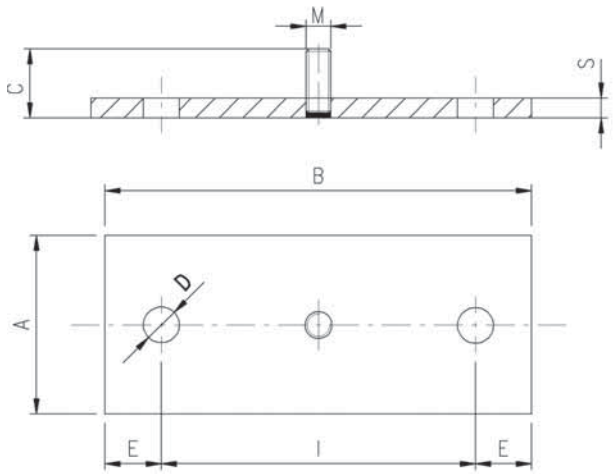

PLATE	A/V MOUNTS	A	B	C	D	E	I	M	S
PT 20/25	AM 20/25	40	95	11	8	12,5	70	6	6
PT 30/40	AM 30/40	40	95	12	8	12,5	70	8	6
PT 50	AM 50	75	135	16	10	15	105	10	8

NOTE:

NOTE:

February 2010

FERRARI™
INDUSTRIAL FAN TECHNOLOGY

F.lli Ferrari
Ventilatori Industriali S.p.A.

Via Marchetti, 28
36071 Arzignano (VI)
Tel +39 0444 471100
Fax +39 0444 471105
info@ferrariventilatori.it

www.ferrariventilatori.com